বাংলাদেশের সুবর্ণজয়ন্তী
Bangladesh 50

মুজিব শতবর্ষ MUJIB 100

রূপপুর আজ পরিচিত নাম
বিশ্বের দরবারে,
পরমাণু থেকে বিদ্যুৎ গড়া
বাঙালি করিতে পারে।

Installation of Reactor Pressure Vessel for Rooppur Nuclear Power Plant, Unit-1

Bangladesh Atomic Energy Commission
Ministry of Science & Technology

Introduction

Energy plays a key role in the national security of any country because without energy there's no economy and without economy there's no progress of society in general. The accelerated and sustainable economic development depends on access to affordable, reliable and clean energy. Today, the world has entered into a new dimension for development: all aspects of life are changing, and energy is no exception. World energy markets are currently undergoing a profound transformation that is significantly changing the volume and structure of demand and leading to increased competition across the globe.Today's key trends include the evolution of the energy mix in favor of cleaner sources.

A Nuclear Power Plant can generate low-cost electricity for modern society's demand for dependable and affordable electricity. Nuclear energy can play an important role in supplying clean, reliable electricity that is delivered 24/7, so that people can meet their needs and aspirations without harming the environment. The clean and cheap energy of nuclear should be a goal of every country, especially in a future where energy demand is expected to rise.

The government of Bangladesh under the leadership of Hon'ble Prime Minister H.E. Sheikh Hasina has enabled our nation to think big and undertake a brave, new challenge to become a developed one by 2041 and the attainment of Sustainable Development Goals by 2030. In this pursuit the government has taken nuclear energy as one of the key players in power generation.

The introduction of nuclear energy will help in ensuring energy security and energy independence of Bangladesh to be ensured for attaining the targeted development goals of Bangladesh. Through the construction of Rooppur NPP, the dream of the nation about having a nuclear power plant is coming true. It is expected that the Unit-1 and Unit-2 of Rooppur NPP will be connected to the national grid within 2023 and 2024, respectively. The Rooppur NPP will generate electricity at a lower cost and meet modern society's demand for dependable and affordable electricity. This is extremely important for the development of our country, as our goal is to turn on the lights in every Bangladeshi home, to achieve SDGs and to transform Bangladesh into developed nation. The implementation of Rooppur NPP project will help in ensuring energy security and construction of additional NPPs in the country would be one of the ways for the energy security of Bangladesh and to achieve energy independence of the nation.

Rooppur NPP at a Glance

Units:	2 × 1,200 MWe (gross)
Reactor Type:	VVER, Model: V-523
Design:	AES-2006, VVER-1200, Generation III+
Design life:	60 years
Owner:	Bangladesh Atomic Energy Commission
General Contractor:	JSC Atomstroyexport (Subsidiary of Russia's State Atomic Energy Corporation ROSATOM)
Main Water Source:	Padma River

History of Rooppur Nuclear Power Plant

1961:
Initiative to build a Nuclear Power Plant

1962-1968:
Rooppur, a site in Ishwardi, Pabna district was selected as the site for the country's first NPP project.

1969-1971:
The then Pakistan Government gave up the plan of that 200 MW capacity nuclear power plant.

1972-1975:
Soon after the independence the Father of the Nation Bangabandhu Sheikh Mujibur Rahman took an initiative to set up a 200 MW nuclear power plant at Rooppur site.

1976-1986:
MS Sofratom conducted a feasibility study and found Rooppur site suitable for constructing nuclear power plant.

125 MW(e) Nuclear Power Plant Project was approved by the ECNEC. But due to some constraints and limitations that plan could not be implemented.

1987-1988:
Further feasibility study was conducted by LAHMEYER International, Germany and Motor Columbus of Switzerland which justified that the site is technically, economically and financially feasible for 300-500 MW NPP.

1995-1996:
The first National Energy Policy (NEP) of Bangladesh was formulated in 1996 by the Ministry of Power, Energy and Mineral Resources. It identified that nuclear energy as an option for power generation.

1997-2001:
The then Chairman of Bangadesh Atomic Energy Commission (BAEC), Dr. M A Wazed Miah took a fresh initiative to construct a nuclear power plant with the capacity of 600 MW. Site related data were updated and the development of human resources for Rooppur NPP project implementation initiated under an annual development programme. Bangladesh Nuclear Power Action Plan (BNPAP) was approved by the government in 2000.

2007-2008:
A commitment was made for the implementation of Rooppur NPP project by all the leading political parties of Bangladesh in their Election Manifestoes of the National Parliamentary Election of 2008.

Under a development programme titled as 'Accomplishment of Essential Activities for the Implementation of Rooppur Nuclear Power Plant Project' step was taken to perform the primary preparatory works and development of nuclear infrastructures.

2009:
A MOU was signed on May13, 2009 between BAEC and ROSATOM, the State Atomic Energy Corporation, Russian Federation. A high-level decision-making team, led by the State Minister, Ministry of Science and Technology visited Russian Federation in October, 2009 to get realistic ideas on implementation, funding, administration and organizational structure of the NPP project

2010:
A Framework Agreement on cooperation in using nuclear energy for peaceful purposes was signed between

Bangladesh and Russian Federation on May 21, 2010. The Nuclear Energy Programme Implementing Organization (NEPIO) was formed in the form of high-level governmental committee. The National Parliament of Bangladesh adopted a decision on November 10, 2010 for immediate implementation of nuclear power project. Hon'ble Director General of IAEA, Mr.Yukiya Amano visited Bangladesh on December 2010 and assured his support for implementation of Rooppur NPP project.

- A National Committee on 'Rooppur NPP' under the leadership of the Hon'ble Prime Minister was formed to provide directives for proper implementation of the Rooppur NPP project and establishment of national nuclear power infrastructure.
- A Technical Committee headed by the Hon'ble Minister, Ministry of Science and Technology; A Working group headed by the Secretary, Ministry of Science and Technology; and Eight Sub-Working Groups were formed to monitor, coordinate and address the conditions of specific infrastructure issues according to the IAEA guidelines and to support the National Committee in establishing Rooppur NPP.

2011:

The 1st meeting of the National Committee on Rooppur NPP Headed by the Hon'ble Prime Minister was held on March 2, 2011 and decision on implementation of Rooppur NPP project under government ownership was taken.

IAEA preparatory mission for site evaluation visited Rooppur NPP site on 10-14 July, 2011 and provided recommendations for the characterization of Rooppur site.

An Intergovernmental Agreement (IGA) between the Government of the People's Republic of Bangladesh and the Government of the Russian Federation on cooperation concerning the construction of Rooppur NPP signed on November 2, 2011. The IGA appointed BAEC as the Customer and JSC Atomstroyexport as the Contractor of Rooppur NPP.

The INIR mission of the IAEA conducted a visit from 09-15 November, 2011 to review and provide recommendations for the national nuclear power infrastructure focusing on the Phase-I and Phase-II activities of the IAEA Milestone documents.

2012:

An Inter-Agency Agreement between the Russian nuclear regulatory body Rostechnadzor and Ministry of Science and Technology, Bangladesh signed on February 27, 2012.

An integrated work plan for 2012-15 was developed in May, 2012. The 2nd Meeting of the National Committee on Rooppur NPP Headed by the Hon'ble Prime Minister held on June 14, 2012; a decision on implementation approach, funding & financing mechanism of Rooppur NPP project was taken.

Bangladesh Atomic Energy Regulatory Act, 2012 was passed in the National Parliament on 19 June, 2012.

2013:

An Intergovernmental Credit agreement was signed between Bangladesh and Russian Federation on January 15, 2013 with the provision of a $500 million Russian credit loan for financing the preparatory phase activities of Rooppur NPP.

An independent nuclear regulatory authority, 'Bangladesh Atomic Energy Regulatory Authority (BAERA)' was formed on February 12, 2013.

'Construction of Rooppur NPP (First Phase)' project was approved on April 2, 2013 for preparatory stage construction activities of Rooppur NPP.

BAEC and JSC Atomstroyexport signed the first contract on the feasibility evaluation, site engineering survey, environmental studies and environmental impact assessment of Rooppur NPP on June 27, 2013.

The 3rd Meeting of the National Committee was held on August 7, 2013; a decision for acquisition of additional 800-acre land for Rooppur NPP project was taken.

Nuclear Industry Information Center inaugurated at Bangabandhu Sheikh Mujibur Rahman Novo Theatre campus on October 01, 2013 to provide information on atomic energy to the general people.

Hon'ble Prime Minister of Bangladesh H.E. Sheikh Hasina laid the foundation stone for the Construction of Rooppur NPP (1st Phase) Project on October 02, 2013.

Second contract between BAEC and JSC Atomstroyexport to develop the design documentation, first priority working documentation and necessary engineering survey was signed on October 02, 2013.

2014:

Bangladesh Atomic Energy Commission and JSC Atomstroyexport signed the Third Contract 'Performance of First Priority Works for the Preparatory Stage of Rooppur NPP Construction' on June 05, 2014.

The first meeting of Joint Coordination Committee (JCC) under the IGA between the governments of the Russian Federation and Bangladesh held on 22-23 July, 2014 in Moscow; decisions to start consultations for signing General Contract for Rooppur NPP Construction and Inter Governmental Credit Agreement were taken.

2015:

A company named 'Nuclear Power Plant Company Bangladesh Limited (NPCBL)' was formed on August 18, 2015 to establish and operate nuclear power plants in Bangladesh including Rooppur NPP. The Company started functioning through its first board meeting on August 23, 2015.

Nuclear Power Plant Act, 2015 was passed in the National Parliament on September 16, 2015 creating provision to set up Nuclear Power Plant Company Bangladesh Limited as the operating organization of NPPs including Rooppur NPP.

Bangladesh Atomic Energy Commission and JSC Atomstroyexport signed General Contract for Rooppur NPP Construction on December 25, 2015.

2016:

The 4th Meeting of the National Committee held on February 03, 2016; decisions for establishing 'Physical Protection System' of Rooppur NPP, communication system, transportation infrastructure was taken.

IAEA conducted a follow-up INIR mission in Bangladesh during 10-14 May, 2016 to assess the progress and assist in prioritizing further infrastructure development activities based on recommendations and suggestions provided by the INIR mission in 2011.

Bangladesh Atomic Energy Regulatory Authority issued 'Siting License' of Rooppur NPP on June 21, 2016.

The 2nd meeting of the JCC under IGA took place on 21-22 June, 2016, some crucial decisions were taken regarding Site License, NPP Design and Construction License, Grid System Development, Physical Protection System, Training for NPP Personnel.

Bangladesh and Russian governments signed the Intergovernmental Credit Agreement for the construction of the Rooppur NPP on July 26, 2016.

The Executive Committee of the National Economic Council (ECNEC) approved 'Construction of Rooppur NPP' Project on December 06, 2016.

2017:

Agreement between the Russian Federation and Bangladesh on 'Cooperation Concerning Return of Spent Nuclear Fuel from Rooppur Nuclear Power Plant to Russian Federation' was signed on March 15, 2017.

An Intergovernmental Agreement between the Government of the People's Republic of Bangladesh and the Government of the Republic of India on 'Cooperation in the Peaceful Use of Nuclear Energy' and an Inter-Agency Agreement between Global Centre for Nuclear Energy Partnership (GCNEP), Department of Atomic Energy of the Government of India and Bangladesh Atomic Energy Commission on 'Cooperation Regarding Nuclear Power Plant Projects in Bangladesh' was signed on April 08, 2017.

Hon'ble Prime Minister H.E. Sheikh Hasina addressed the opening session of 'Conference on the IAEA Technical Cooperation Programme: 60 years and Beyond-Contributing to Development' on May 30, 2017 in Vienna, Austria.

Director General of the International Atomic Energy Agency (IAEA) H.E. Mr. Yukiya Amano paid a visit to the site of the Rooppur NPP project on July 03, 2017. Mr. Yukiya Amano expressed his satisfaction over compliance in implementing Rooppur NPP Project adding that Bangladesh is constructing the plant considering high standard of security measures.

Agreement between the Government of the Russian Federation and the Government of the People's Republic of Bangladesh on 'Cooperation Concerning Return of Spent Nuclear Fuel from Rooppur Nuclear Power Plant to Russian Federation' was signed on August 30, 2017.

Design and Construction License for Rooppur NPP Unit-1 was issued by BAERA in favor of BAEC on November 04, 2017.

First concrete pouring of first unit of Rooppur Nuclear Power Plant was done by the Honorable Prime Minister of Bangladesh H.E. Sheikh Hasina on November 30, 2017. With the first concrete pouring of Rooppur nuclear power plant Bangladesh has entered into the world Nuclear Club and its dignity as a country has been elevated to a unique height.

2018:

The Addendum was signed between BAEC and Global Centre for Nuclear Energy Partnership (GCNEP), Department of Atomic Energy, India on the January 05, 2018 under the IGA signed between Bangladesh and India for appointment of Indian specialist for Rooppur Nuclear Power Project.

The 3rd meeting of the JCC under IGA took place on March 06, 2018, Moscow, Russia where several crucial decisions were taken at that meeting for operation and maintenance of Nuclear Power Plant.

Design and Construction License for the Unit-2 of Rooppur Nuclear Power Plant was issued by Bangladesh Atomic Energy Regulatory Authority on July 08, 2018.

Installation of Core Catcher of Unit-1 of Rooppur NPP on August 18, 2019.

2019:

The 4th meeting of JCC under IGA between People Republic of Bangladesh and Russian Federation, was held on March 06, 2019.

Installation of Core Catcher of Unit-2 of Rooppur NPP on May03, 2019.

General Framework Agreement on Nuclear Fuel Supply for Rooppur nuclear power plant was signed on August 06, 2019 between Bangladesh Atomic Energy Commission and TVEL, JSC Russian Federation.

November 30, 2019 was observed as Nuclear Day in Rooppur Nuclear Power Plant site area.

2020:

lAEA Deputy Director General Mikhail Chudakov visited the project site on February 02, 2020. He expressed satisfaction over the quality of construction work of the nuclear power plant.

March 16, 2020 Alexey Likhachev, Director General, Rosatom, Russian Federation, paid a courtesy call on Hon'ble Prime Minister H.E. Sheikh Hasina of the Government of Bangladesh and briefed her on the overall progress of the project.

An amended protocol to the IGA was signed between the governments of Bangladesh and the Russian Federation. The protocol was signed by Hon'ble Minister of Science and Technology Architect Yeafesh Osman on behalf of the Government of Bangladesh and Alexey Likhachev, Director General of Rosatom on behalf of the Russian Federation. The signing of this protocol provided an opportunity to receive technical assistance from the Russian Federation for the commissioning, operation and maintenance of the Rooppur Nuclear Power Plant.

November 10, 2020 Reactor Pressure Vessel for Unit-l arrived at Project Site of Rooppur Nuclear Power Plant from Russian Federation.

On November 16, 2020,Hon'ble Foreign Minster Dr. A K Abdul Momen along with senior officials of the Foreign Ministry visited Rooppur NPP site with the aim of familiarizing the project to the country's diplomats.

On November 30, 2020, Rooppur Nuclear Power Plant Project celebrated 'Nuclear Day' on the third anniversary of the first concrete pouring of Rooppur NPP. On that day Bangladesh Atomic Energy Commission inaugurated the Public Information Center, Ishwardi, in a building of the Municipal Mayor's Office, Ishwardi, Pabna.

2021:

On March 03, 2021, the installation of two complex polar crane beams was completed on the rail track of the Unit-1 of Rooppur NPP.

On June 01, 2021, with the support of Bangladesh and the Russian Federation, a modern training center for building and construction specialists was launched at Rooppur NPP.

The pressurizer of Unit-1 of Rooppur NPP was installed on June06, 2021.

On June 20, 2021, the Reactor Circulation Pump (peripheral casing) of Unit-1 of Rooppur NPP was installed.

The dome of the inner containment wall of Unit-1 of the Rooppur nuclear power plant was installed on July 24, 2021 at elevation from +44.1m to +61.7m.

Preliminary work for installation of Reactor Pressure Vessel was started on September 14, 2021 in presence of Hon'ble Minister of Ministry of Science and Technology. On October 10, 2021 Hon'ble Prime Minister H.E. Sheikh Hasina will inaugurate the placing of Reactor Pressure Vessel at designed position.

Pre-Project Activities of Rooppur NPP

In the past, several initiatives for planning and implementation of Rooppur NPP project were taken. Nuclear Power and Energy Division (NPED) of Bangladesh Atomic Energy Commission (BAEC) played important role as the project directorate for those activities. The NPED has been maintaining the core competency for project planning and implementation.

Nuclear power project development and the nuclear power infrastructure development are closely related. Firstly, Bangladesh focused on establishment of basic infrastructure for developing NPP project. During period 2009-2012, the development of basic nuclear infrastructure has been initiated (Phase-1 and Phase-2 activities) and the site resources investigation of Rooppur NPP were performed under the Annual Development Project 'Accomplishment of Essential Activities to Build Rooppur Nuclear Power Plant' project. The Rooppur NPP owner organization, BAEC was solely responsible for site resources investigation.

BAEC formed PMU for pre-project activities of Rooppur NPP by the existing manpower of NPED. The then Director of NPED, Dr. Mohammad Shawkat Akbar was appointed as the Project Director. The pre-project activities of Rooppur NPP included the necessary investigations of the technical, economic, safety and regulatory aspects that would be needed for implementation of the NPP project. The site resources investigations and developing project site reports based on IAEA recommendations were one of the focused activities at the pre-project phase. The creation of national infrastructure necessary to support the preparatory phase construction of Rooppur NPP project and the decision to go forward with the project is another important dimension of the pre-project activities. Other important area of the pre-project activities was to develop core manpower for Rooppur NPP project planning and implementation.

The project-project activities include site resources investigations. The site resources investigation studies in light with international requirements with involvement of Bangladesh University of Engineering and Technology, Ground Water Hydrology Division of Bangladesh Water Development Board, Institute of Water Modeling, Survey of Bangladesh were carried out during the period 2009-2011. The site-specific parameters, data and information in the areas of demography, geotechnical, hydrological, meteorological were derived on the basis of the IAEA guidelines. The site resources investigations were focusing on the following aspects:

1. Site Specific Geological, Geophysical and Geotechnical Study of Rooppur Nuclear Power Project;
2. Geology and fault information; Compilation of earthquake database; Analysis of seismic source and seismicity characteristics; Probabilistic seismic hazard assessment (200, 475, 975, 2475 years);
3. 1D Site response analysis (Site specific) study; Development of site-specific response spectrum;
4. Determination of liquefaction resistance by cyclic triaxial test;
5. Assessment of liquefaction potential of the site;
6. Supervision of Geophysical Investigation by P-S logging;
7. Initial Environmental and
8. Analyses of Soil Stabilization and Slope Stability.

Based on the above studies, the Rooppur NPP project site related technical reports were prepared. The Rooppur NPP project site report was updated during the period 2009-2011 based on the existing data and information and also incorporating the data and information those were obtained from some instrumentation-based site-specific investigations. The IAEA Preparatory Mission for Site Evaluation of Rooppur NPP site was conducted during the period 10-14 July 2011 to review Rooppur NPP site specific survey reports and siting activities. This mission had reviewed the site reports and visited the site (Picture-1) and provided recommendations for performance of site assessment activities focusing on the geotechnical aspects and geomorphology, hydrological hazards and river morphology based on the IAEA guidelines. After Fukushima NPP accident, the IAEA had given emphasis

on the site safety aspects and engineering solutions to increase resistance of plants to extreme natural events and recommended that the vendors should revise the site safety features-into their designs with adequate features to increase robustness of their designs to extreme natural events.

Picture - 1: The IAEA Preparatory Mission for Site Evaluation of Rooppur NPP site was conducted during the period 10-14 July 2011

Based on the outcomes of these studies, the vendor country and the IAEA confirmed the Rooppur NPP as a suitable site for NPP construction. Several visits of the IAEA experts and the Russian experts were conducted to the project site.

The determination of national position on ownership, funding and financing modality, selection of technology, type of contracts for construction of Rooppur NPP were the fundamental decisions. The analyses of these decision-making phase of project implementation were the components of the pre-project activities. Creation of nuclear infrastructure for phase-1 activities according to the IAEA milestones approach was an important area of the pre-project activities.

Based on INIR mission recommendations, Bangladesh has examined the BOO and BOOT modality for Rooppur NPP project. BAEC experts participated in different meetings and workshops on funding and financing mechanism of NPP. The IAEA conducted a national training course in Bangladesh on funding and financing mechanism nuclear power project. The IAEA has developed several guiding documents on funding and financing mechanism on nuclear power project. The Nuclear Power and Energy Division, BAEC conducted studies on funding options for Rooppur NPP and analyzed the financial risk of BOO and BOOT alternatives based on the IAEA tools. The MoST has examined the financing options for Rooppur NPP project and prepared recommendations. A high-level committee headed by the Economic Affairs Adviser to the Prime Minister and the Minister, Ministry of Science and Technology was formed by the government that proposed the level and proportion of borrowing amount and potential national guarantees for borrowing from the technology vendor country.

Through management of this project, the PMU has got adequate training and practical experiences and developed capacity and infrastructure for project management. The pre-project activities were performed during the period 2009-2012. The PMU of BAEC has some 20 to 30 personnel for pre-project activities. It involved several national organizations for site resources investigations.

Preparatory Construction Phase Activities of Rooppur NPP

The construction of a NPP requires huge preparation and years of preparatory work. One of the biggest challenges is completion of preparatory construction activities and another challenge is how to meet the requirements of the licensing obligations (Siting License and the Design and Construction License). The support of the experienced contractor or vendor is for timely completion of the preparatory construction activities.

Bangladesh decided to develop a construction approach for Rooppur NPP project that correlates between preparatory construction works and licensing activities on one hand and construction of NPP on the other. Taking into account the domestic legal and regulatory conditions to obtain licenses, industrial base, availability and competence of human resources for managing the construction project, national resources and economic and environmental condition to support NPP build, a Two-Stage Contracting Scheme has been adopted for Rooppur NPP. The first-stage contracts cover the detailed siting activities, engineering surveys and environmental studies, assessment and definition of the related design bases, preparation of documentation packages of the licensing activities, site development works and construction and erection of the facilities required for construction of NPP. The second-stage contract is the General Contract, which covers all the activities starting from detailed design, procurement, construction, to commissioning and handover of the plant to the customer.

Bangladesh had adopted a two-stage construction approach for Rooppur NPP, the preparatory construction stage activities, which requires the basic nuclear infrastructure development in accordance to the IAEA guidelines (completion of Phase-1 and Phase-2 activities and respectively, achievements of Milestones 1 and 2) and the construction and commissioning of Rooppur NPP that requires full developed nuclear infrastructure (completion of Phase-3 activities and achievement of Milestone 3).

Bangladesh has decided to develop Rooppur NPP project as a government infrastructure development project. The National Committee Headed by Hon'ble Prime Minister has taken a decision that the Rooppur NPP will be built under government ownership as a part of larger energy supply security objectives, for environmental protection, to benefit from technology spin-offs of this technology. The National Committee also decided to finance implementation of Rooppur NPP project from the government budget through arrangement a major part of the funding with a loan in the form of the state export credit backed by the technology vendor country.

During the visit of the Hon'ble Prime Minister to the Russian Federation, an agreement was signed on January 15, 2013 for the completion of the Preparatory Stage of Construction of the Rooppur Nuclear Power Plant with a State Export Credit of US$ 500 million. Also, a memorandum of understanding (MOU) regarding Main Stage of Credit Financing to finance the construction work of Rooppur Nuclear Power Plant was signed.

Thepreparatory phase activities of Rooppur NPP construction activities were carried out under the Annual Development Project 'Construction of Rooppur Nuclear Power Plant (First Phase)'. The implementation period of this project was from April 2013 to December 2017. The Construction of Rooppur Nuclear Power Plant (Phase-1) project got the approval of the Executive Committee of the National Economic Council (ECNEC) on April 2, 2013 for the period March 2013 to June 2018 and Dr. Mohammad Shawkat Akbar, Chief Scientific Officer and Director of NPED, BAEC was appointed as the Project Director on 2 May 2013.

The Hon'ble Prime Minister Sheikh Hasina inaugurated the preparatory phase activities at the green field of Rooppur NPP on 2nd October 2013 (Figure-2). This inauguration of the preparatory phase project by the honorable Prime Minister reflected the commitment of the highest political authority of the country and was a practical step for construction of Rooppur NPP. It is a remarkable day in the history of nuclear power programme of Bangladesh.

The preparatory construction activities included feasibility evaluation, site characterization, environmental impact assessment, various on-site engineering studies, development of pre-design and design documentation of Rooppur NPP and the priority civil construction and erection works.

Picture - 2: Hon'ble Prime Minister of Bangladesh H.E. Sheikh Hasina and Hon'ble President of the Russian Federation H.E. Vladimir Putin during the signing of State Export Credit Agreement for Rooppur Nuclear Power Plant, Moscow, January 15, 2013.

It was decided to carry out the work at the preparatory for construction stage through 4 (four) agreements under the project with the Bangladesh Atomic Energy Commission as customer and the concerned Joint-Stock Company (JSC) Atomstroyexport as contractor. Contract no. 77-258/1110500 for the development of the feasibility evaluation, environmental impact assessment for Rooppur NPP site and the performance of the necessary engineering survey and environmental studies. Contract no 77-258/1308800 for development of design documentation, first-priority working documentation and engineering survey for the design stage of Rooppur NPP in the people's republic of Bangladesh, contract no. 77-258/1310000 for performance of first-priority construction and erection works of preparatory stage prior to the 'first concrete' at Rooppur NPP site, contract no. 77-258/1413100 between Bangladesh atomic energy commission and joint-stock company 'Atomstroyexport' for completion of the works for the preparatory stage of Rooppur NPP construction. BAEC implemented the preparatory phase Rooppur NPP project successfully.

At the preparatory phase construction of Rooppur NPP, the Project Management Unit (PMU) of BAEC has monitor the activities of the contractor and subcontractors and fulfill the obligations of the Customer Organization, BAEC. The PMU of BAEC was headed by the Project Director, with one responsible and experienced professional for each of the following areas: site engineering surveys, civil construction, scheduling and NPP technology assessment, licensing, commercial and legal questions. The manpower of the PMU of the preparatory phase of Rooppur NPP was about 100 in which about 50% were technical personnel. Within the PMU, a project site management team headed by Site Director was formed to monitor and supervise the activities of the PMO of the General Contractor, JSC Atomstroyexport.

Through participation of the preparatory project, the manpower of the PMU, BAEC got practical training for management of the construction project of nuclear power plant. Several national training courses and workshops were organized for PMU with the IAEA assistance for developing competency in NPP project management. The

manpower was trained under fellowship and scientific visit programmes through IAEA TC projects and bilateral assistances from the Russian Federation and India.

Under preparatory phase construction project, the feasibility evaluation, detailed and comprehensive assessment and characterization of the of Rooppur NPP project site and environmental studies based on regulatory requirements in agreement with IAEA Safety Standards, techno-normative requirements of the vendor and the applicable relevant rules and regulations of Bangladesh were performed. The EIA studies were performed based on the requirements of the Department of Environment, Bangladesh. Based on these studies, the site safety report, feasibility report, EIA report, pre-design documentations, design documentations of Rooppur NPP have been developed.

The main criteria for selection of the design of a NPP technology in Bangladesh are the size and capacity, service life-time, availability and capacity factor, safety features, licensability, simplicity and standardization of the design and reliability, operability and maintainability of the plant. In addition, Bangladesh had adopted the 'reference plant' concept of the IAEA for the country's first NPP, the Rooppur NPP. Based on this approach, the criteria of the selection of the design of NPP technology was basically focused on the The AES-2006 (VVER-1200) design technology of the Russian VVER series has been selected for Rooppur NPP based upon the results of the detailed project site assessment and environmental studies, feasibility evaluation, environmental impact assessment as well as technical and economic characteristics.

The design of Rooppur NPP has been developed with the designing, equipment manufacturing, construction and commissioning experience of it's referential plant, Novovoronezh NPP-II, which was elaborated with project site specific features to protect the plant against the extreme external natural impacts: like seismic effects, extreme level of ground waters (NPP site under-flooding), extreme wind loads including a tornado, extreme temperatures, external air shock wave, lightning strokes, external fires, airplane crash, etc. and man-induced impacts as a part of the preparatory phase project. Accordingly, the design documentation on Rooppur NPP namely Preliminary Safety Analysis Report (PSAR), Probabilistic Safety Analysis (PSA) Report, QA Programme, and organization matters of Rooppur NPP were developed. These reports were submitted to BAERA for design and construction license of Rooppur NPP Unit-1 and Unit-2. BAERA reviewed the documentation in collaboration with IAEA, Russian regulating organization and the experts of Indian regulatory body as well as National organization.

The civil construction and erection works were performed at the pioneer base and first-priority facilities of the construction and erection base (CAB-1) at Rooppur NPP site at the preparatory phase project (as shown in Picture-4 and Picture-5).

Picture - 3: Inaugural of Preparatory Phase Construction Activities at the Green Field of Rooppur NPP on 2nd October 2013 by Hon'ble Prime Minister Sheikh Hasina

The civil construction and erection activities under this project were mainly focused in the following areas of Rooppur NPP:

- Surveyor Base and Pioneer Base
- Construction and Erection Base-1
- Soil Stabilization under facilities in the Industrial Area
- Preparing foundation of Reactor building to start First Concrete Pouring (FCD)

All the works are related with the first phase project of Rooppur NPP was completed before First Concrete pouring Date (FCD).

There are 20 facilities at the surveyor and pioneer base of Rooppur NPP that includes Administrative Building, Indoor Warehouse (1st Building), Indoor Warehouse (2nd Building), Indoor Warehouse (2nd Building), Reinforcement Welding Section, Metal Work Warehouse with 16 t Granty Cranes, Area of Construction Machinery, Canteen with 60 Seats, Innert Aggregates Warehouse, Concrete Mixing Plant, Domestic Effluent Sewerage Pump Station, Public Water Closet, Storm Water Pump Station, Storm Water Temporary Storage tank, Construction Laboratory-1, Construction Laboratory-2. These facilities are used for mainly for various survey activities and monitoring activities of Rooppur NPP site and its surrounding areas.

On the other hand, the Construction and Erection Base-1 (CEB-1) has been constructed for performing construction activities in the form of production control and construction control of Industrial area as well as Construction and Erection Base-2 (CEB-2). The CEB-1 includes about 50 objects/facilities, namely concrete batching plants, storage area, canteen, workshops, office buildings, warehouses, construction laboratories, silos of cements, etc.

Picture - 4: Pioneer Base facilities of Rooppur NPP

Picture - 5: Construction and Erection Base (CEB)-1

Soil Stabilization Work

The subsoil strain properties at Rooppur NPP site are low & loose soil which is susceptible to dynamic liquefaction under seismic impact. Soil beneath the foundation of important buildings and structures shall be resistant to dynamic liquefaction under seismic impacts. To improve the soil, Deep Soil Mixing (DSM) technology using Wet Speed Mixing (WSM) method has used. Part of the soil stabilization work was performed under preparatory phase project and it was mainly under the reactor facilities. The rest of the soil stabilization work is performed under General Contract. The main parameters of the soil stabilization activities are as follows.

- Cement type: CEM-III
- Total Soil Stabilized Facilities: 163 nos.
- Total volume of stabilized soil: 43,43,666 m^3
- Total amount of consumed cement: 13,03,100 ton
- Work Executors: NSL, BAUER &Freyssinet
- Work start date: February 2017
- Work Completion Date: January 2019

Picture - 6: Soil Stabilization works in Industrial Area

Picture - 7: Homogenous Surface Condition of the Stabilized Soil after Excavation

Construction of Rooppur NPP

Under the provision of the IGA, Bangladesh Atomic Energy Commission (BAEC) and JSC Atomstroyexport (Rosatom Engineering Division) signed the General Contract on Rooppur NPP Construction (No. 77-258/1414800) on December 25, 2015 for construction of Rooppur NPP with two VVER-1200 reactors with a total capacity of 2,400 MW. This is an evolutionary project of Generation III+ that fully meets international safety requirements. The General Contract for construction of Rooppur NPP is an EPC type contract which includes the development of working documentations using VVER-1200 reactors, construction work and erection work, supply of equipment and materials for Rooppur NPP, nuclear fuel for initial loading and two reloading, education and training of Rooppur NPP operational personnel.

The Russian credit financing had covered about 90% of the contract prices for construction of Rooppur NPP. The IGA and the IGCAs had established both legal and financial base for implementing the Rooppur nuclear power project. In addition to advance payment, the government is providing necessary fund for creation of the infrastructure for safe and secured construction of Rooppur NPP.

Picture - 8: Signing of the Intergovernmental agreement on the allocation of the Russian Federation State loan for funding the construction of the Rooppur NPP on 26 July, 2016

The preparatory phase construction activities of Rooppur NPP had begun with the necessary studies and ended with the first concrete pouring of the Unit-1 of Rooppur NPP. The first concrete for the main construction phase of Unit-1 was poured in November 2017 by H.E. Sheikh Hasina. Construction of Bangladesh's first nuclear power reactor, Rooppur-1, has officially begun with the pouring of the first concrete for the VVER-1200 reactor's base-mat in November, 2017. The First Concrete of Unit-2 was poured in July 2018 by Hon'ble Prime Minister H.E. Sheikh Hasina.

The construction of Rooppur NPP covers all the activities starting from detailed engineering and design, procurement and supply of equipment at the project site, soil improvement, civil construction and erection work, commissioning and adjustment works, manpower training and final takeover of the plant. The General Contractor is also assigned responsibilities for Rooppur NPP manpower training, commissioning and testing and adjustment work, etc. The Master Plan of Rooppur NPP is shown in Picture-.

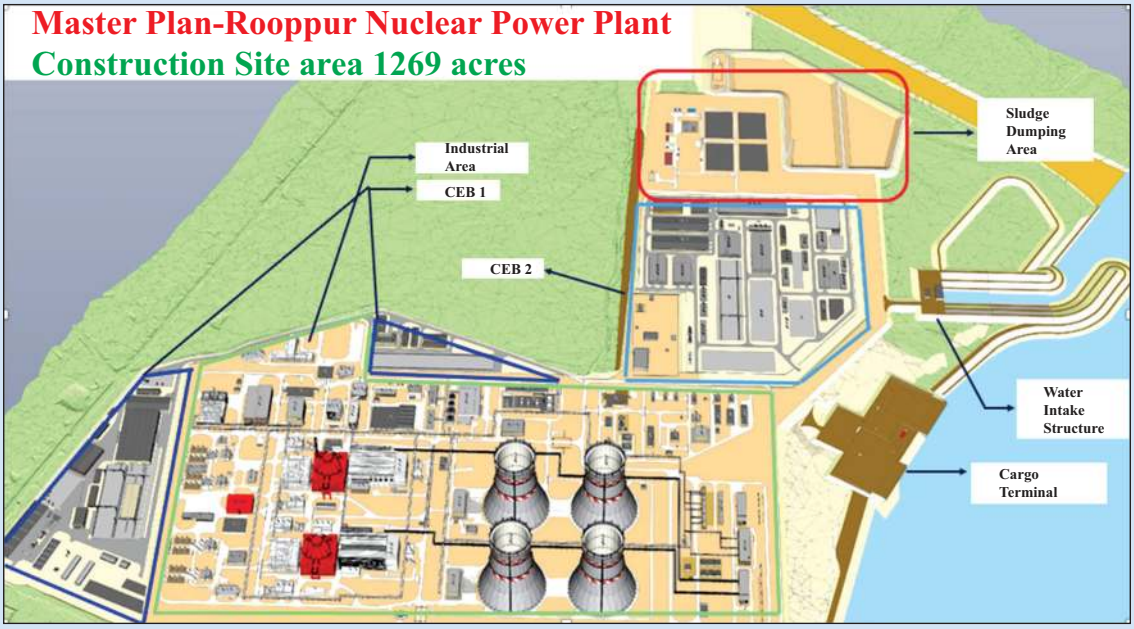

Picture - 9: Overview of Rooppur NPP: 3D Master Plan

Picture - 10: Inaugural of First Concrete Pouring of Unit-1of Rooppur NPP on 30 November, 2017 by Hon'ble Prime Minister H.E. Sheikh Hasina.

Picture - 11: Inaugural of First Concrete Pouring of Unit-2 of Rooppur NPP on 14 July, 2018 by Hon'ble Prime Minister Sheikh Hasina

The Executive Committee of the National Economic Council (ECNEC) approved 'Construction of Rooppur NPP' Project on December 06, 2016. Dr. Mohammad Shawkat Akbar was appointed as the project director of the preparatory phase. The project documents of Rooppur NPP establishes a project management setup for management of construction work of Rooppur NPP.

The General Contract, JSC Atomstroyexport for Rooppur NPP construction has assigned with responsibilities of developing detailed design documentation, equipment supply, civil construction and erection work, equipment testing and adjustment work, manpower training and final hand over the ready plant to BAEC. JSC Atomstroyexport established a turnkey Project Management Organization (PMO) for Rooppur NPP construction. The PMO of the General Contractor is coordinating and managing the Rooppur NPP construction activities, supply of equipment and materials and all related services. It is headed by the Project Director and the Chief Engineer who are responsible for performance of NPP construction activities at the site. There are Russian NPP design organizations, responsible for developing Rooppur NPP design and working documentations and work execution plan for performances of the civil construction and erection work of Unit-1 and Unit-2 and also for designing equipment for Rooppur NPP and transportation those to the construction site.

BAEC developed the Project Management Unit (PMU) based on the IAEA guidelines of owner's organization in a turnkey contract approach as well as project documents. The PMU is a matrix type organization headed by the Project Director. A total of 370 manpower is approved for this management unit. The type and number of experts/staffs are adjusting according to the progress of the work. The manpower of the PMU is attached from BAEC and NPCBL. The PMU is comprising of experts/staffs with diverse roles and responsibilities. Under project director, there are deputy project directors and heads who are assigned to support the project director in different areas: schedule, contract and technical management, construction site management, engineering coordination, quality management, human resource management, licensing management.

The PMO of the General Contractor establishes safety management in the work place that includes nuclear safety, industrial safety, occupational safety, fire protection, radiation protection, etc. The safety managing unit of PMU of BAEC at the site is regularly monitoring these safety aspects in parallel to JSC Atomstroyexport. The PMU of BAEC has undertaken the obligations of BAEC under the General Contract for managing Rooppur NPP project. The PMU is responsible for management of the General Contract and all additional contracts to the General Contracts in an effective manner.

The PMU of BAEC is performing the technical supervision of construction activities and monitoring the quality through incoming control, quality supervision during construction process and equipment manufacturing process in accordance to contractual obligations. It has established design change management process during construction and equipment manufacturing.

The construction activities at the project site are managed by the Site Director supported by his deputies of the main divisions, namely technical supervision and quality control division, production and technical management division and general management division. Under these divisions there are several departments: technical supervision, quality management, planning and scheduling, incoming inspection and control, design support, licensing management, as-built documentation management and milestones, equipment erection-mechanical, electrical, electrical, I&C, general administration & HR, finance and accounts. A deputy project director is supervising the construction and erection works and regularly guiding the site director and reporting to the Project Director.

The PMU at the site has established project monitoring and quality management system for monitoring civil construction and erection work and established management system for general supervision of all activities at the site, arranging management level meeting with the General Contractor and sub-contractors, reviewing and accepting Level-3 and Level-4 schedule of sub-contractors and General Contractor, maintaining of Log of each activity and constrains (if any), updating documentation, ensuring clearance of all non-conformance coordinating interdisciplinary entities of the General Contractor.

The mechanical and electrical department at the site is monitoring various tests normally cover examination of mechanical components, electrical and I&C equipment and civil structures, according to the applicable codes and standards and performed by the sub-contractors of the General Contractor. The quality supervision team at the site is regularly performing inspection and testing of incoming material, inspection of reinforcement and concreting work and testing and installation of the equipment as per the approved Quality Assurance Programme (QAP) and inspection of all incoming material as per QAP/approved quality system and ensuring latest drawing and documents in used at construction works which is issued for 'Stamp for Construction' at the construction site of Rooppur NPP under the leadership of the Site Director. The head of the quality division of the project along with quality team/inspection team of BAEC have been supervising and monitoring these activities.

The respective deputy project director is supervising the above-mentioned activities; provides directives/ guidelines to the site director conducting meetings with General Contractor and subcontractors and also providing recommendations the completion of the milestones of the construction activities to the Project Director for acceptance of the completed work by the Customer organization.

The inspectors of PMU of BAEC are reviewing the quality plan and procedures of equipment manufacturing and conformity assessment and approving such plans and procedures. The inspection team of the PMU working at different equipment manufacturing companies in Russia in parallel the quality team manufacturing companies and General Contractor. The inspectors of the PMU have been checking the conformity to technical requirements of the equipment at different manufacturing stages of the equipment. They have been performing acceptance inspection of the manufactured equipment in Russian Federation before shipment of those equipment to Bangladesh. In addition, the PMU of the headquarter established a system of controlling, reviewing and adapting necessary project planning and project implementation schedules. The PMU has established system for monitoring and reviewing the Level-1 and Level-2 schedule report to BAEC and MoST periodically, monitoring and reviewing of the Level-3 and Level-4 schedule of contractors. One of the deputy project directors is supervising and guiding the above activities and reporting to the Project Director for necessary guidance and approval.

Developing human resources for future operating organization for management, operation & maintenance of Rooppur NPP is an important activity. Under the present, the JSC Atomstroyexport are conducting training programmes in accordance to the Appendix-14 of the General Contract. A joint training advisory team between

JSC Atomstroyexport and BAEC for monitoring the training programmes. BAEC is establishing a training center in the site to meet the human resource skill requirements for the project and future operating company, NPCBL. A divisional head of the project has been assigned for these activities.

The licensing process is one of the important components of the project management. The PMU establishes the licensing management approach through interfacing between three partners in the licensing process: JSC Atomstroyexport, BAEC and BAERA. A divisional head is coordinating this licensing management activities. The PMU has been preparing and submitting all materials and documentation timely to BAERA as per regulatory compliances for obtaining authorizations/permits/licenses at different construction stages of the project.

The PMU has established a management system for accepting the completed work, equipment and documentation packages, equipment supply, training and training documentation packages for achieving milestones in accordance to the General Contract. It has been ensuring timely payment to General Contractor, JSC ASE for the completed milestones. The Technical Committees of BAEC are working together with the project personnel are finally reviewing the completed activities and submitted milestones of the JSC ASE and providing recommendations to BAEC for achieving the milestones. The relevant deputy project directors are coordinating these activities under the leadership of the project director.

Under General Contract, there are almost 300 facilities/objects are being constructing at Rooppur NPP project site mainly in the Construction Erection Base-2 (CEB-2) and Industrial and Common Facility Area. The CEB-2 is intended and constructed for conducting Nuclear/Industrial construction during erection, installation and commissioning works of NPP to ensuring safety. In the CEB-2, about 100 facilities are constructed. The major facilities are Equipment Storage, Welding and NDT testing facilities, Office for equipment installation companies, Radioactive source storages, concrete batching plants, Fire service and civil defense building etc. The CEB-2 is shown in Picture-12

Picture - 12: Construction and Erection Base-2

The main facilities in the Industrial areas are the Nuclear Island and Turbine Island of the reactor power Unit-1 and Uniut-2. The nuclear island consists of Reactor Building, Reactor Auxiliary

building and Transport Portal building. On the other hand, the Turbine Island is consisting of Turbine, Demineralization and Normal Power Supply Building. The major facilities in the Common Plant Facilities area include Fresh fuel storage, special vehicle garage for fuel transport, Laboratory facilities, Health physics building, Fire Station, Power evacuation facilities, Underground Shelter stations, Emergency communication facility, Demineralization building, Amenity building, administrative building, Canteen with conference etc. are to be constructed in Rooppur NPP plant. Most of these facilities are under construction and more than 50% is completed. All the facilities/structures in the Industrial and Common Facility Area are now in active construction stage. All of these facilities will be under access control area.

After the first concrete pouring, the construction gained momentum as the reactor support truss was installed in the design position and the third layer of the reactor building inner containment was erected at the power unit-1. Earlier in July this year, the sixth tier of the inner containment dome of the reactor building was installed at the power unit-1.The metal structure has been installed in its regular place on the cylindrical part of the reactor building containment. The country's dream to produce nuclear energy has come a step closer as the reactor pressure vessel installation for the first unit of the under-construction Rooppur Nuclear Power Plant.

In the following, the Progress of Construction of the facilities at Industrial and Common Facility Area are briefly discussed.

Reactor Power Unit-1 (10UJA)

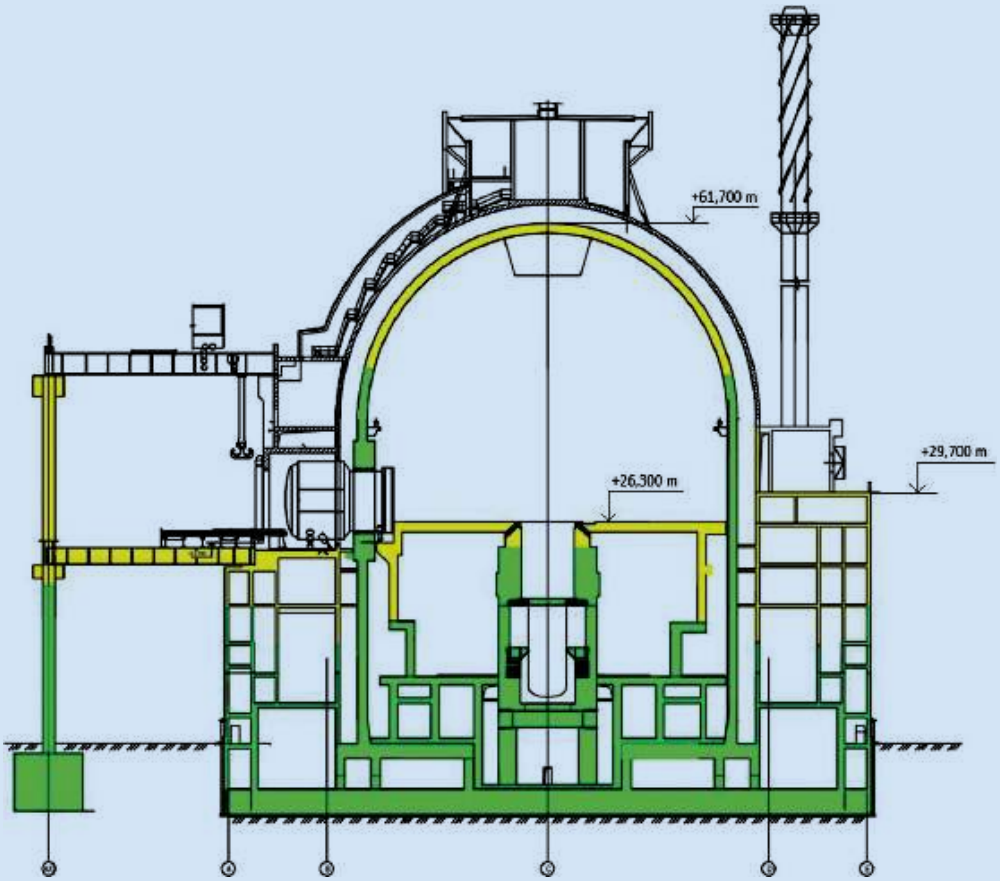

Picture - 13: Rooppur NPP Containment Design Philosophy

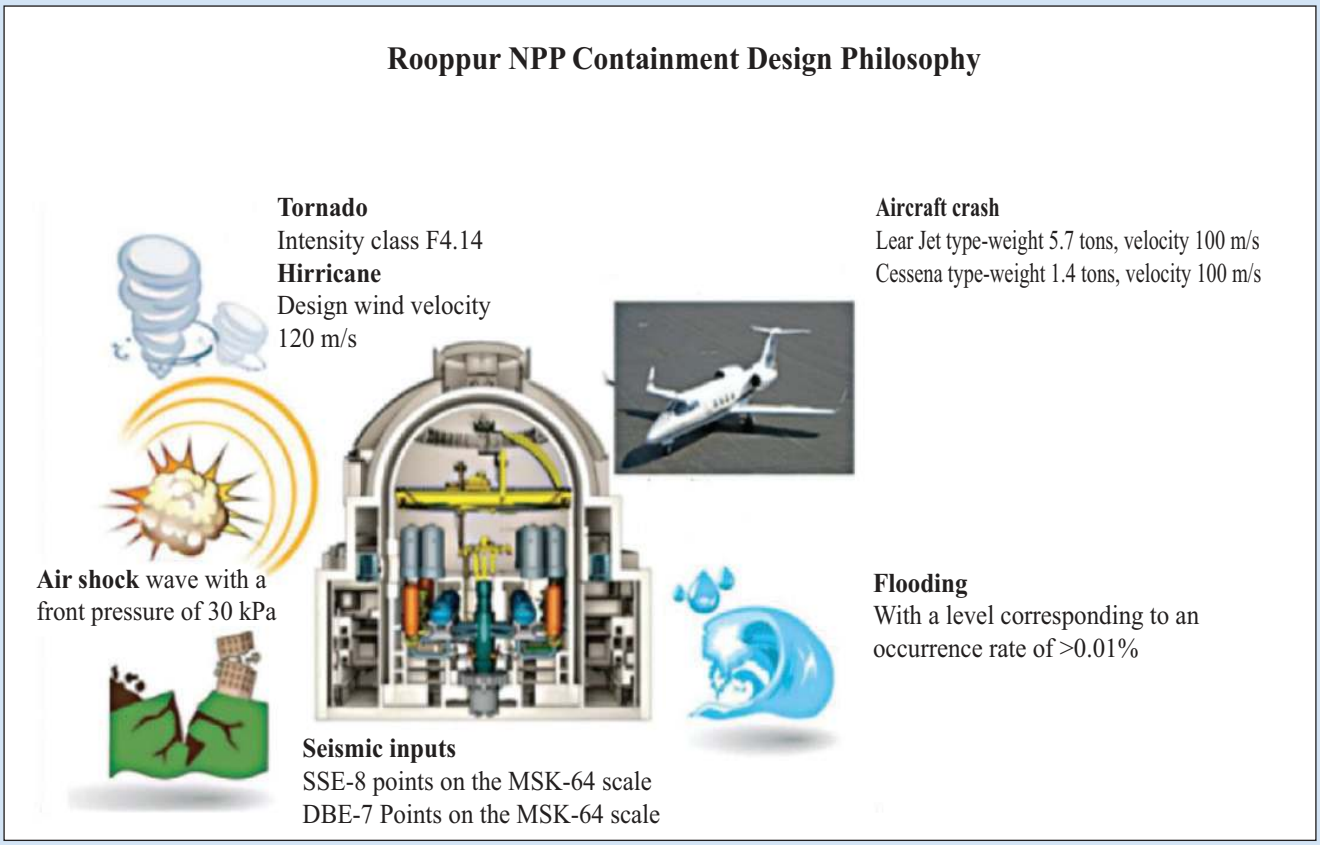

Reactor Building is the facility where nuclear fission reaction is taken place for generating heat to produced steam ensuing safety fundamentals of nuclear energy. The base dimension of reactor building 78.0 m x 72.0 m; inner diameter is 44.0 m and height of cylindrical part 38.5 m. Top elevation of outer containment is 64.4 m and top of reactor building 71.4 m

The Rooppur NPP Containment design parameters are as follows.

Seismic Loads:

- SSE mean intensity of VIII points as per MSK-64 scale (design value 8.03 points)
- DBE mean intensity of VII points as per MSK-64 scale (design value 6.86 points)
- SSE level peak acceleration 0.333 g
- DBE level peak acceleration 0.172 g

Tornado Loads:

- Design class of tornado intensity according to the F-scale is 4.14

Air Shock Wave:

- Wave pressure 30 Kpa

Flood:

- The level of design maximum flood in the cross-section of the Rooppur NPP site section with 0.01% occurrence rate which is 15.784 m in the MSL system

Tornado Loads:

- Lear Jet type aircraft: aircraft weight: 5.7 ton & speed 100 m\s
- Cessna type aircraft: aircraft weight: 1.5 ton & speed 100 m\s

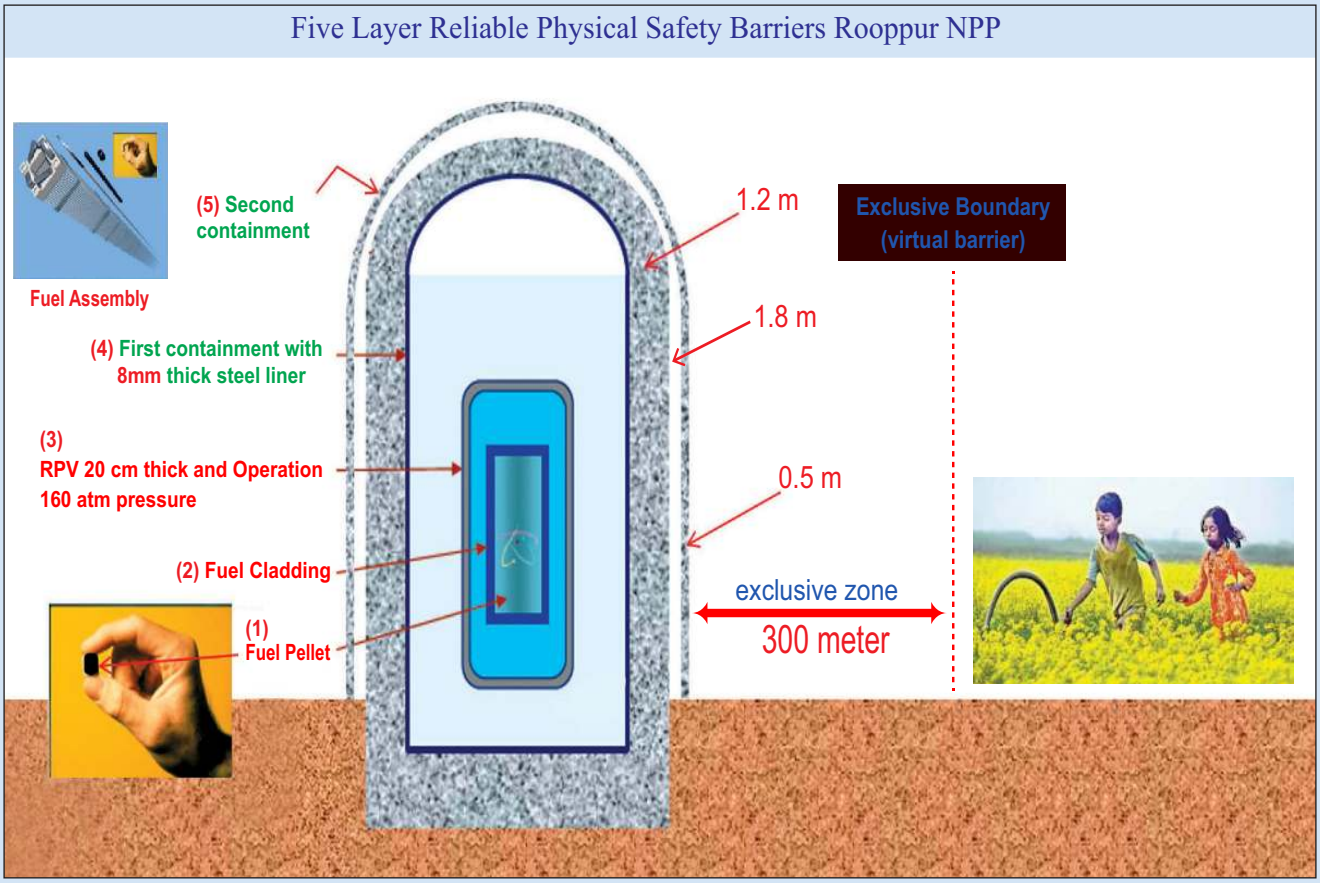

Picture - 14: Picture: Rooppur NPP Containment design parameters

A brief of the First concrete of 10UJA is as follows.

- Foundation plate
- Start of works – November 2017
- End of works – March 2018
- Size of Foundation: 79.2 m x 73.2 m
- Thickness of Plate: 3.0 m
- Volume of SCC– 17061.60 m^3
- Concrete type -B30 W6 (Strength 38.4 MPa)

The width of the foundation of the reactor building (10UJA) is 3 meters. Total rebar consumption in 3m depth of the foundation of this facility is about 13,46,277.3 kg≈1346 tons.

Picture - 15: Foundation Plate Reinforcing

Picture - 16: Concrete Pouring Work of Reactor Building Foundation

Major construction phases of the reactor building are briefly discussed. The of Structural Elements civil construction from -5.45 m to 0.00 m elevation:

- Contour wall or perimeter wall:From elevation -5.45 m to -0.05 m; thickness: 600 mm. Resides over all side of the reactor building.
- Adjacent structure internal wall: From elevation-5.45 m to -0.65m to continuation +4.75 m; thickness: 600 mm-900 mm. Main purpose is to separation of rooms with various equipment.
- Inner and outer annular floor wall: From -5.45 m to -1.85 m elevation. Thickness of the wall is 1.2 m and type of concrete is B60W6 concrete. Area (tendon gallery) between these walls will be used for pre-stressing work later on construction
- Walls of premises under Hermetic area:This wall resides within hermetic area and lies between inner

annular floor wall and catcher wall. Elevation of the wall is -5.45 m to -1.85 m. This wall will support the slab at -1.85 m to 0.00 m MSL and also contains some safety equipment. Thickness of the walls are 900 mm

- Reactor Cavity Wall:Starts from -4.9 m elevation and will continue till +26.30 m elevation and this wall resides inside the Accident Localization Area (ALA). Works as a support wall for Core catcher. Thickness of the wall is 2.2 m and radius to the outer side of the wall is 6.0 m. Concrete type is B60W6
- Accident Localization Area Wall: Starts From -4.9 m and will continue till +7.14 m elevation and this wall resides inside the Accident Localization Area (ALA) between core catcher wall and reactor cavity wall. Thickness is 1.0 m and type of concrete is B30W6
- Outer Wall of catcher: Starts from -5.45 m to -1.85 m elevation and this wall resides inside the Hermetic area. Thickness of the wall is 1.2 m & 1.95 m and has an octagonal shape. Concrete type is B30W6
- Hermetic area Slab:1.80 m thickness slab within ACA. A base for all the structural element inside ACA.

A step-by-stepapproach has been adopted for Construction of Inner Containment Wall (ICW). Preassembly of the inner containment Blocks are divided into 06 stages.

- **First Stage:** from elevation 0.00 m to +6.42 m (12 mounting blocks). Each mounting block weight 27 ton except Pilaster part (50 ton).
- **Second Stage:** from elevation +6.42 m to +20.42 m (12 mounting block). Each mounting block weight 50 ton except pilaster part (70 ton). These parts contain penetrations for steam pipelines.
- **Third Stage:** from elevation +20.42 m to +34.42 m (12 mounting block). Each mounting block weight 50 ton except transport lock part (140 ton).
- **Fourth Stage:** from elevation +34.42 m to +38.50 m (12 mounting block). Each mounting block weight 40 ton. These parts contain cantilever crane console for installation of polar crane.
- **Fifth Stage:** Fifth stage will be installed from elevation +38.5 m to +44.1 m.
- **Sixth Stage:** From elevation +44.1 m to +61.7 m.This part will be assembled in three tiers.

Construction Progress of Inner Containment Wall

Picture - 17: Inner Containment Wall Casting Work Sunny Weather

Picture- 18 : Inner Containment Wall Concreting of 2nd Tier (+5.5 m to +19.0 m)

Picture -19: Inner Containment Wall Concreting of 3rd Tier (till +32.7 m)

Picture - 20: Inner Containment Wall Concreting of 4th Tier (till +38.5 m)

Construction Progress of Spent Fuel Pool within the Inner Containment Wall

Fuel pool is located in ALA between main coolant loops within immediate proximity to shaft and is connected with it via refueling channel, designed for transportation of one FA. Channel is blocked with two hydraulic locks.

Fuel pool top elevation +26.300 m is determined by the reactor design and protective water level above FA active part during carrying it in refueling channel. Fuel pool bottom elevation +6.495 m was selected so that protective water level above FA heads will be lower refueling channel threshold. A total capacity of fuel pool racks is accepted on basis of possibility for storage of spent FA (together with

CPS CR) accumulated within ten years of power generation, taking into account emergency core unloading, including accommodation of emergency FA in sealed bottles. The design capacity for storage is 732 cells for fuel assemblies + 24 cells for hermetic casings which ensures storage of spent nuclear fuel for 10 years.

Reinforced concrete structure of fuel pools are placed on axis 180 degrees from elevation +6.2 m to +26.3 m. It is in rectangular form by 6520 mm x 14520 mm. structurally and functionally fuel pool is divided into two parts: fuel and container casks. Fuel cask of the fuel pool is designed for fuel assembly pit. Container cask is used for safe handling of fuel assembly. Fuel pool is constantly flooded with boron water. The inside walls of the fuel pool are lined with 08X18H10T grade stainless sheets. Fuel pool structures up to +17.00 m are made of B30 extra heavy concrete. From elevation +17.00 m to +26.3 m are made of B30 heavy concrete. Concreting of walls has been finished up to elevation +14.5 m. Reinforcement work from elevation +14.5 m to +26.3 m is going on.

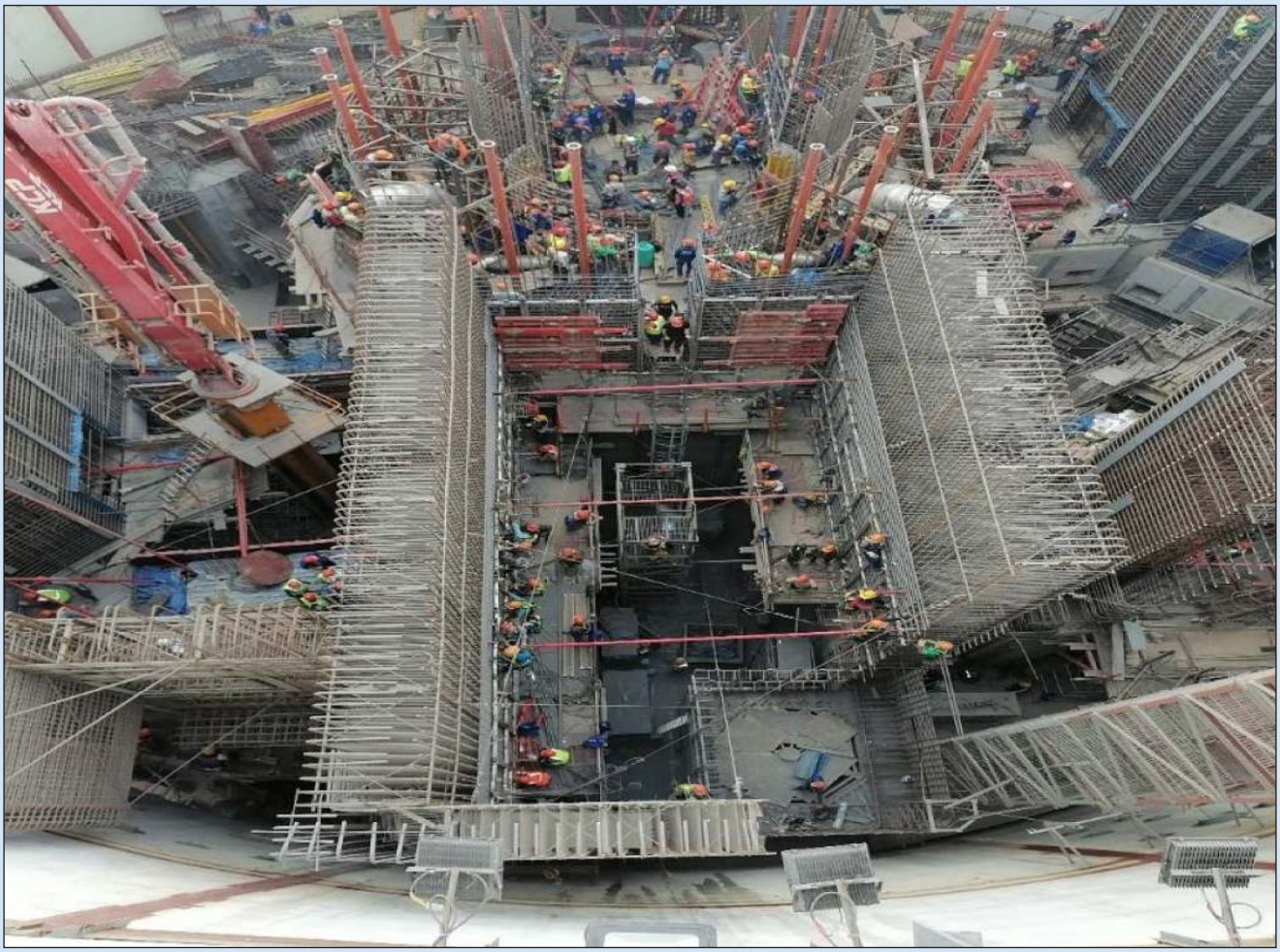

Picture - 21: Present Conditionof Spent Fuel Pool

Concrete Structure of Reactor Cavity with Inner Containment Wall

The Reinforced concrete structures of reactor cavity are allocated from elevation -4.9 m to +26.3 m. It carries out of function of bearing structures for reactor vessel, core catcher and biological shield.

It functionally divided into four parts:

First three parts (from elevation. -4.9 m to +15.670 m) are made of high strength B60 self-compacting concrete. The walls separating spent fuel pool and cavity structures are made of extra heavy concrete with density of 3350 kg/m^3. The last part from top of thrust truss to elevation +26.3 m are made of B30 concrete with density of 2350 kg/m^3.

1. Lower part of the structures from -4.9 m to top of cantilever truss top (elevation +4.75 m) with external diameter of 12000 mm and thickness of 2200 mm. It contains core catcher and cantilever truss. Both external and internal concrete surfaces are lined with stainless steel metal sheets of 4 mm.

2. The 2nd part of cavity structures is from the cantilever truss top to support truss top (elevation +11.3 m) with external diameter of 12000 mm and thickness of 2605 mm. Inside reactor cavity there are reactor pressure vessel, dry shielding structures reactor support trusses and thermal insulation of vessel cylindrical part.

3. The 3rd part of Reinforced Concrete structures from support truss top (elevation +11.3 m) to thrust truss (elevation +15.670 m) are made of two columns at 90 and 270 degrees. In this zone there are nozzles for main circulation pipelines.

4. The 4th part of concrete structures from thrust truss elevation +15.670 m to elevation. +26.3 m are cylindrical with external diameter of 12000 mm and wall thickness equal to 2750 mm up to elevation. +23.3 m and equal to 1950 mm above +23.3 m. In this area there are upper block of reactor, upper unit thermal insulation and hydraulic lock connecting spent fuel pools and reactor cavity. Internal concrete surfaces are lined with stainless steel metal sheets of 4 mm.

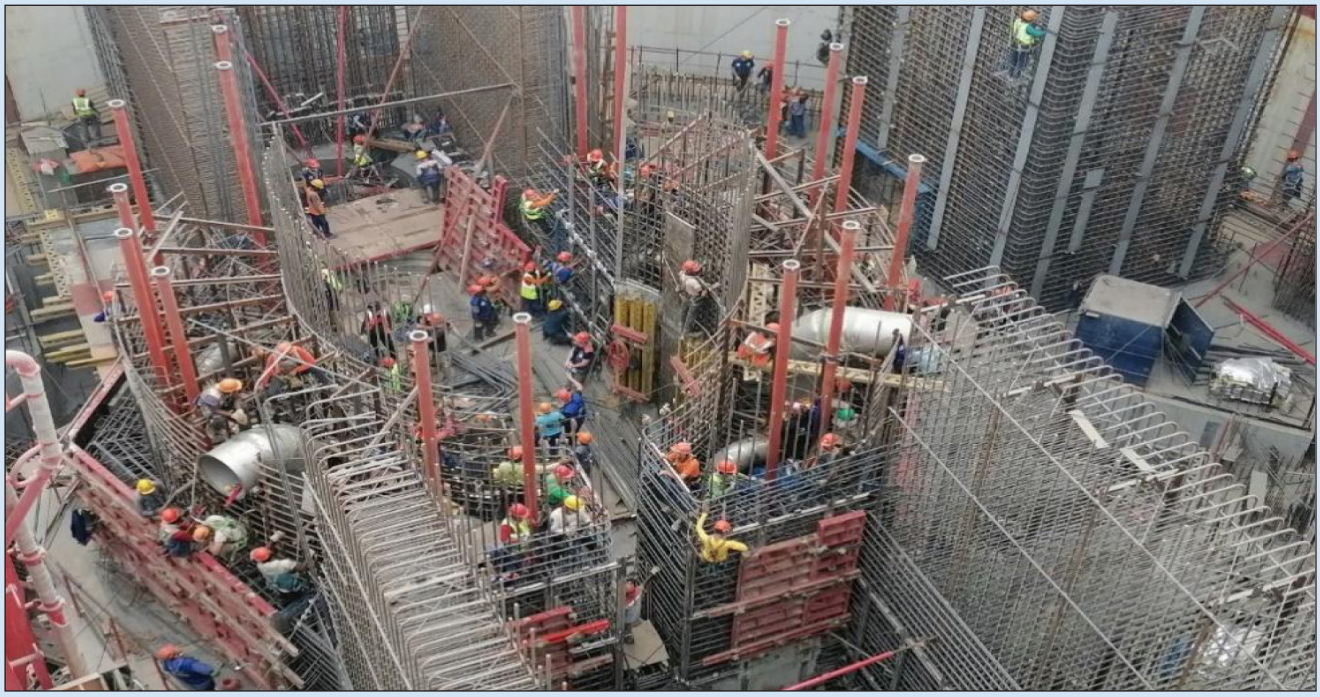

Picture - 22: Present condition of cavity structures

Construction Progress of Outer Containment Wall

Outer containment is designed for protection of systems & elements of reactor building from exposure to external and mad made abnormal impacts and also to create ventilated clearance & accumulation of leakage.

- Main geometric dimensions:
  - overall containment height is +64.5 m.
  - cylinder and dome wall thickness are 500 mm.

Element: Outer containment represents a cylindrical structure topped by a dome in the form of hemisphere made of cast-in-place concrete. Internal surface of the Outer Containment Wall (OCW) shall be coated with effective polymer coating ensuring the required level of sealing for external containment.

- Current Condition: Concreting has been finished up-to elev. +7.35 m with B30 W6 Concrete.

Picture - 23: On progress construction of Outer Containment Wall

Picture - 24: Formworks Installation of Outer Containment Wall

The concreting has been completed to elevation +43.4 m. Polar crane has been installed at +38.5 m elevation. Pre-commissioning of Polar Crane has been completed. The lower part of dome from elevation. +44.1 m to +51.7 m and the upper part of the dome at elevation +51.7 m to +60.5 m elevation has been installed. Concreting of slab at elevation 0, +8.14 m, +14.5 m and +26.3 m completed. The reactor building is visible at elevation +60.5 m (Picture-25).

Picture - 25: Reactor Island Unit-1

Summary of the Progress

Soil Improvement Works : Up to 20m using DSM is completed.
Foundation work : -8.45 m to -5.45 m (considering 19.15 m MSL is 0)
Reactor Cavity : -4.9 m to +26.0 m, civil works are completed.
Inner containment wall : 44.8 m concreting is completed out of +61.7 m;
Inner containment, Dome is installed.
Outer Containment wall : 21.45 m concreting is completed out of +65.4 m
Spent Fuel Pool : Slab and walls up to elev. +26.3 m has been completed.
Reactor Internal pit : Installed
Installation of PTU : Installed
Installation of metal liner : Completed and passivation work is ongoing.
Polar Crane : Installed and commissioned for CEWs

Important Equipment Installation status of Reactor Island:

SN	Equipment list	Status	Elevation	Remark
01	Core Catcher Vessel	Installed	4.90 m	Installed on 26.08.2018
02	Reactor Pressure Vessel	Yet to install	+4.8 m	Will be installed on 10.10.2021
03	Pressurizer	Installation ongoing	+14.7 m	Installed on 01.06.2021
04	Reactor Coolant Pumps-1	Installation ongoing		Only spherical casing with lower spacer installed on 24.05.21
05	Reactor Coolant Pumps-2	Installation ongoing		Only spherical casing with lower spacer installed on 20.05.21
06	Reactor Coolant Pumps-3	Installation ongoing		Only spherical casing with lower spacer installed on 29.04.21
07	Reactor Coolant Pumps-4	Installation ongoing		Only spherical casing with lower spacer installed on 27.05.21
08	Bubbler Tank	Installed	+8.140 m	Installed on 25.08.2020
13	Hydro accumulator-1	Installation ongoing	+26.5 m	Placed in design position
14	Hydro accumulator-2	Installation ongoing	+26.5 m	Placed in design position
15	Polar crane	Installed	+38.50 m	Commissioned for construction & Erection works

Most of the equipment for Unit-1 of the Rooppur NPP has been manufactured and supplied to the construction site. Major equipment has already been placed to their design positions In the following, the equipment placed to the design position of Unit-1 are briefly discussed.

Installation Core Catcher

Core catcher is a device provided to catch the molten core material of a nuclear reactor in case of a nuclear material and prevent it from escaping the containment of the reactor building. It is located in a concrete cavity under the RPV lower head and is cooled from outside by water on the cavity flooding. The interior volume is partially filled with comparatively low-melting iron and aluminum oxides of low density and with steel acting as sacrificial materials. If necessary, the core catcher shall collect the core melt materials and ensure their uniform allocation in the core catcher body. The Core catcher of Rooppur NPP is fully adapted for the relevant site conditions and safety requirements, has improved seismic resistance, hydro-dynamic and shock strength, as well as equipped with flood protection and simplified installation and assembly technology. Weight of the core catcher is about 200 tons.

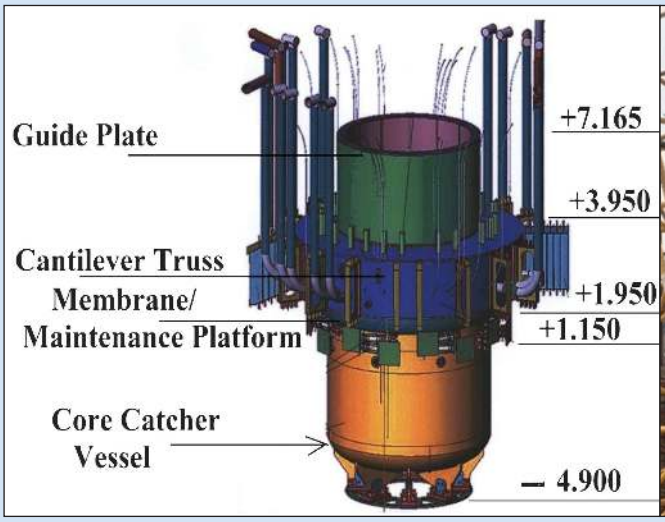

Picture - 26: Core Catcher Features

Picture - 27: Core Catcher at elev. -4.90 m

Cantilever Truss

The Cantilever truss, weighing about 163.094 ton, is designed for protection of MCC body and communications against destruction by corium. It has been installed at the elevation +3.950 m on February 20, 2019

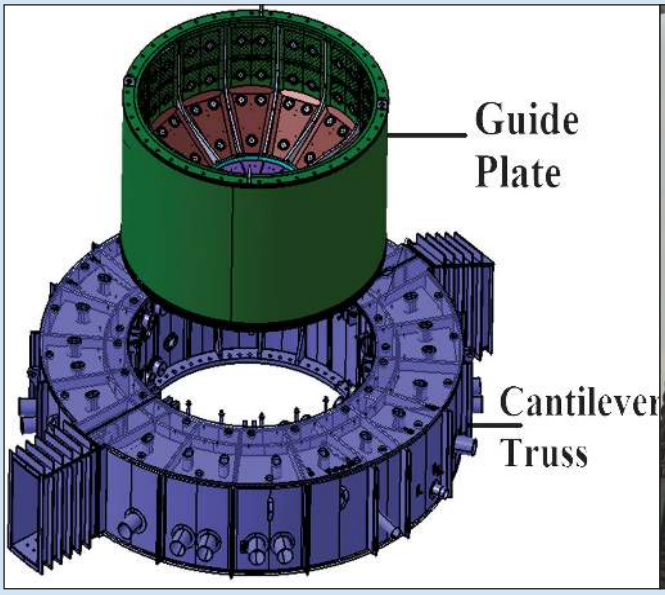

Picture - 28: Cantilever truss

Picture - 29: Cantilever truss features

Dry Protection

Dry protection is intended for reduction of thermal and radiation loads to the concrete cavity, ensuring the admissible limits of neutron and gamma fluxes in the radial direction in the reactor core and formation of neutron field for normal operation of the neutron flux monitoring system. Dry protection is a metal structure filled with serpentine concrete. It has been installed at the elevation from +4.85 m to +10.025 m on September 26, 2019

Picture - 30: Dry protection

Support Truss: In Reactor Cavity the purpose of the support truss is to fix the reactor pressure vessel in place and to receive the weight loads from it. Weighing about 87.40 ton, it has been installed from the elevation +7.16 m to +11.11 m. on September 23, 2019

Picture - 31: Support Truss

Hydro Accumulators

Total eight hydro accumulators are intended for emergency core cooling with power and without power respectively.

Purpose: The system is designed to supply boric acid to the reactor with a concentration of at least 16 g/dm^3. concentration for core flooding in loss of coolant accident conditions, when coolant level in reactor pressure vessel is low and primary circuit pressure drops below 1.5 MPa.

There are 4 active hydro accumulators and 8 passive hydro accumulators. They are also known as Emergency Core Cooling System. Each of the active hydro accumulators is occupied by 60m^3 and each of the Passive Hydro Accumulators (Passive Heat Removal System-PHRS) is occupied by 120m^3.

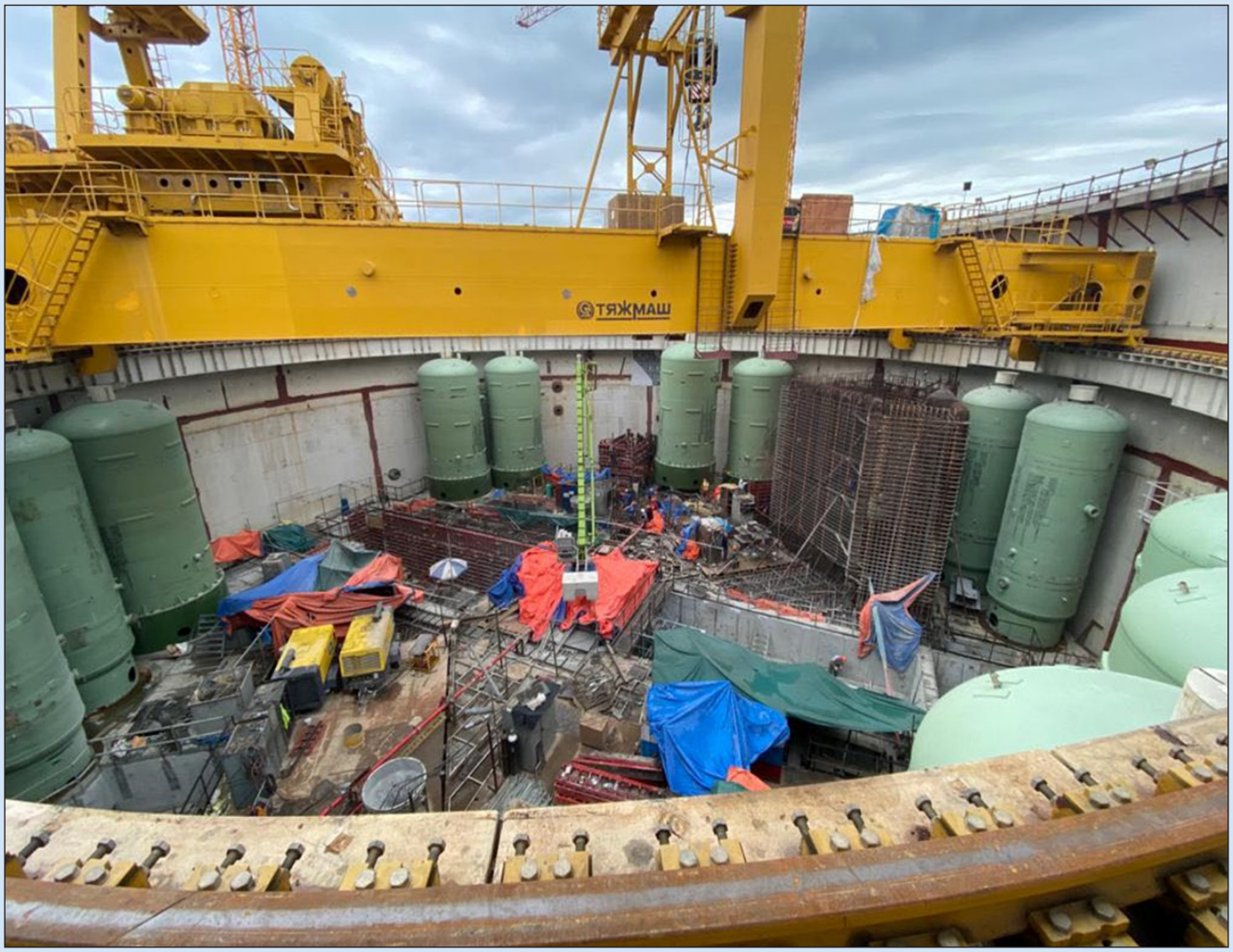

Picture - 32: Hydro Accumulators

Pressurizer

Pressurizer is a vertical cylindrical vessel with elliptic bottoms, installed and fixed on the lower support and in the upper sliding support. And the pressurization system designed to compensate for the change of volume, building-up, control and limitation of reactor plant primary coolant pressure. Its volume is 79m^3.

Picture - 33: Pressurizer

Bubbler Tank

Pressure relief tank is a steel vessel erected horizontally and comprising a shell ring and two elliptical bottoms. Pressure relief tank is designed to receive steam from the pressurizer in case of pressurizer safety valve pop-up as well as in normal operation. Its volume is $30m^3$.

Picture -34: Bubbler Tank

Reactor Coolant Pumps

Four pieces of reactor coolant pumps (RCPS-1391) are designed to create the circulation of coolant in the reactor plant primary circuit. Additionally, it provides coolant circulation at coasting down during various accidents involving de-energization, which allows smooth switching to the natural circulation mode. Each pump flow rate is 22600 m^3/hr. The pump is vertical, centrifugal, single-stage, with mechanical shaft sealing.

Picture - 35: Reactor Coolant Pump

Polar Crane

Polar crane is one the most complex and important structure of the NPP. Polar crane is used for lifting reactor building equipment during construction and during operation it will be used for transporting the nuclear fuel into the reactor building and again it will be used during decommissioning of the reactor plant.

Picture - 36: Polar Crane

The main Part of Polar Crane are as follows.

1. Crane Rail
2. Crane Bridge
3. Load Trolley (360 Ton & 32 ton)
4. Polar Crane Portal

The Specification of Crane 360 (205)/32/10+10

1.0 Main Hoist load Lifting Capacity
   a. During Installation: 360 ton
   b. During Operation: 205 ton

2.0 Auxiliary Hoist load Lifting Capacity: 32 ton
   a. Service Trolley Lifting Capacity: 10 ton
   b. Portal trolley Lifting Capacity: 10 ton

3.0 Crane Span (Crane Rail Diameter along Axes): 41500 mm

4.0 Lifting Range

   a. Main Hoist: 28 m
   b. Auxiliary Hoist: 47 m
   c. Service Trolley hook: 28 m
   d. Trolley Portal hook: 45 m

The polar crane beams were installed using a heavy tracked crane Liebherr in the reactor pressure vessel at elevation +38.500 m.

Reactor Pressure Vessel

The reactor vessel is a vertical cylinder with a bottom plate and nozzles. The reactor vessel consists of a flange, two nozzle shells, a support shell, core shell and bottom plate, interconnected by annular welded seams. The nozzle shells contain eight nozzles of DN 850 and five DN 300 nozzles (four ECCS nozzles and one I&C nozzle). It contains all the reactor internals perhaps.

A nuclear reactor pressure vessel is vertically positioned in a concrete reactor pit. This is one of the key stages in the main equipment assembly.The installation required special preparation of the on-site roads in order to transport the RPV to Unit-1 construction area. After filling and leveling the roads along the entire route, a special wheeled platform freely passed the way from the equipment temporary storage site to Unit 1 building site. Then, using a heavy duty crawler crane Liebherr LR 11350, the RPV with a mass of 333.6 tons was set to the upright position, lifted above the reactor compartment and installed in its regular place in the reactor shaft. Preliminary work for installation of Reactor Pressure Vessel was started on September 14, 2021 in presence of Hon'ble Minister of Ministry of Science and Technology. On October 10, 2021 Hon'ble Prime Minister H.E. Sheikh Hasina will inaugurate the placing of Reactor Pressure Vessel at designed position.

The RPV for Unit-1 was delivered from the Bangladesh seaport of Mongla along the Padma River to the newly built river terminal in the immediate vicinity of the nuclear power plant construction site

in November 2020. After unloading the vessel at the Rooppur NPP Cargo Terminal, the RPV was transported to the storage site, where it underwent the incoming inspection procedure that confirmed the integrity and high quality of the vessel manufacturing. Earlier, on 20th October, the equipment arrived on the cargo vessel called 'Daisy' at Mongla port, where it was reloaded onto a river barge.The transportation of this heavy-weight equipment from Russia to the Rooppur NPP construction site took almost 2.5 months. The distance along the sea and river routes was, in total, more than 14 thousand kilometers.

Picture - 37: Reactor Pressure Vessel

Picture - 38: Reactor Pressure Vessel

Reactor Auxiliary Building Unit-1 (10UKC)

Reactor Auxiliary Building is consisting of auxiliary process system, special water treatment facility system, radioactive waste system, chemical water laboratory, controlled access zones, nuclear fuel element leakage monitoring.

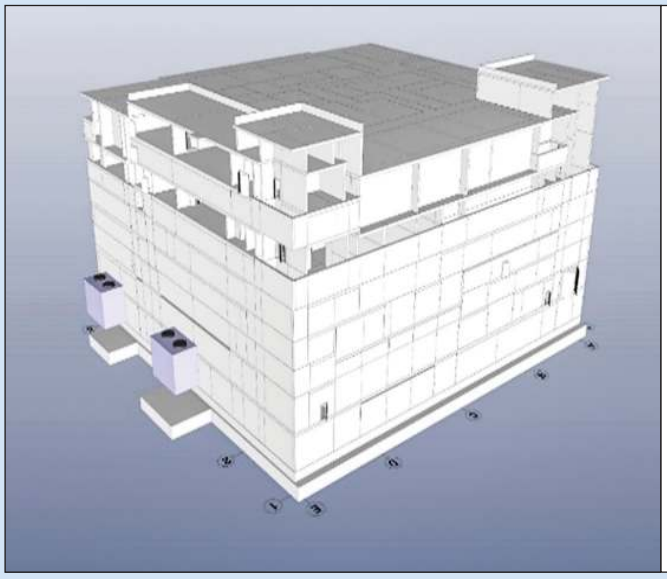

Picture - 39: Reactor Auxiliary Building

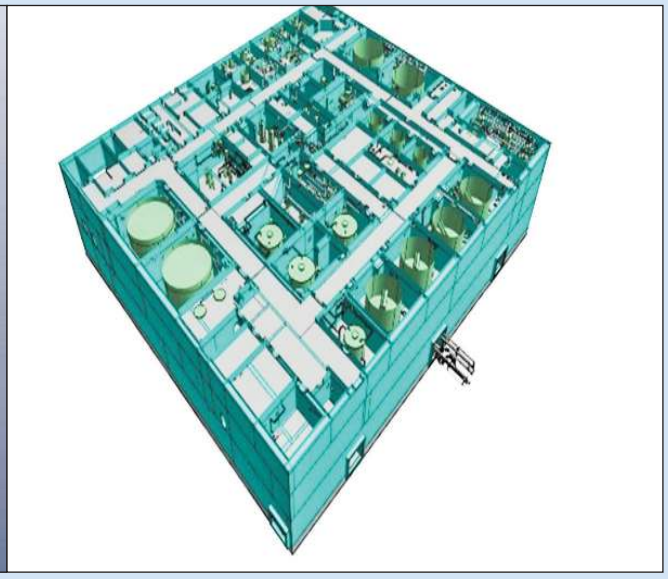

Picture - 40: Reactor Auxiliary Building at elev. +4.75 m

Dimension Size	: 60×66 m; 8 over ground and 1 underground floor
Height	: +29.7 m (+34.3 m at common access area)
Wall thickness	: 200~800 mm
Density of concrete	: 2350~3350 kg/m^3

Construction Progress

1. Soil Improvement works up to +20 m using DSM is completed
2. Foundation slab of 1.4 m meter thickness is completed.
3. Interior Wall is completed up to +15.75 m elevation.
4. Outer Wall is completed up to +15.75 m elevation.
5. Slabs are completed up to +15.75 m elevation.

Picture - 41: Reactor Auxiliary Building (10UKC) Construction Progress

Equipment Installation Status at 10UKC (Unit-1) is as follows.

SL No.	Name of the equipment	Elevation	Date of Installation
1	Potassium Hydroxide Solution Dosing Pump	+4.75 m	25 August, 2021
2	Potassium Hydroxide Solution Tank	+4.75 m	24 June, 2021
3	Ammonia Solution Tank	+4.75 m	25 August, 2021
4	Mechanical Filter of Fuel Pool Water Purification	+4.75 m	26 July, 2021
5	Nitric Acid Solution Tank	+4.75 m	27 July, 2021
6	Montejus	+4.75 m	26 July, 2021
7	Radioactive Drain Collection Tank	+4.75 m	28 December, 2019
8	Ammonium Solution Tank	+4.75 m	25 August, 2021
9	Entrainment Filter	+4.75 m	28 December, 2020
10	Deaerated Water Pump	+4.75 m	10 August, 2021
11	Pump to Supply Oil to RCP Oil Tank	+4.75 m	2 March, 2021
12	Fuel Pool Filling Pump	+4.75 m	31 March, 2021
13	Condensate Tank	+4.75 m	31 March, 2021
14	Mixed Bed Filter	+4.75 m	18 May, 2021
15	Anionite Filter	+4.75 m	7 April, 2021
16	Condensate Tank	+4.75 m	31 May, 2021
17	Dosing Pump of Nitric Acid Solution	+4.75 m	25 August, 2021
18	Intermediate Component Cooling Circuit Pump	+4.75 m	16 September, 2021
19	Potassium Hydroxide Solution Tank	+4.75 m	24 June, 2021
20	Hydrazine Hydrate Solution Tank	+4.75 m	24 June, 2021

Turbine Island of Power Unit-1

Turbine Island is consisting of Turbine (10UMA), Demineralization (10UMX) and Normal Power Supply (10UBA) Building.

Construction Progress:

Soil Improvement Works : Up to +20 m using DSM is completed

Foundation work : Concrete Bedding, Foundation and Waterproofing work are completed.

Column & Slab : 10UMA & 10UMX: All turbine set columns and Slab has been Completed up to +20.00 m;
10UBA: All internal and outer walls and Slab have been completed up to +16.0 m

Picture - 42: Turbine Island Unit-1

Equipment Installation update of Turbine Island:

Sl No.	Equipment list	Status	Elevation
01	Separate collector	Installation ongoing	Elevation -7.250 m
02	Drainage tank	Not installed yet equipment is transported into the Turbine Building in the working elevation	Elevation -7.250 m
03	Condenser	Installation ongoing completed up to stage-2 (out of total 3 stages).	Elevation +0.000 m
04	Main feed water electric Pump set	Not installed yet, foundation preparation work ongoing	Elevation +0.000 m
05	Moisture Separator Reheater	Installation ongoing	Elevation +0.000 m
06	Condensate collector of MSR of stage -1	Installation ongoing	Elevation +0.000 m
07	Condensate collector of MSR of stage 2	Installation ongoing	Elevation +7.8 m
08	Turbine vibration isolator	Installation has been completed for unit	Elevation below +16.00 m
09	Deaerator	Not installed yet, Foundation preparation work ongoing	Elevation +20.500 m

Construction of Power Unit-2 of Rooppur NPP

Nuclear Island of Power Unit-2

Nuclear Island is consisting of Reactor Building, Reactor Auxiliary building and Transport Portal building.

Reactor Building of Power Unit-2 (20UJA)

Construction Progress:

Soil Improvement Works	: Up to 20 m using DSM is completed.
Foundation work	: -8.45 m to -5.45 m (considering 19.15 m MSL is 0)
Reactor Cavity	: -4.9 m to +14.45 m, civil works are completed.
Inner containment wall	: 38.5 m concreting is completed out of +61.7 m;
Outer Containment wall	: +7.55 m concreting is completed out of +65.4 m
Spent Fuel Pool	: Slab and walls up to elevation. +8.04 m has been completed.
Reactor Internal pit	: Installed
Installation of PTU	: Installed

Picture - 43: Reactor Building Unit-2

Equipment Installation update of Reactor Island of Power Unit-2

Sl No.	Equipment list	Status	Elevation
01	Core Catcher	Installed	4.90 m to +1.150 m
02	Membrane	Installed	+1.950 m
03	Cantilever Truss	Installed	+3.950 m
04	Guide Plate		+3.950 m to +7.165 m
05	Dry Protection	Installed	+4.850 m to +10.025 m
06	Support Truss	Installed	+7.16 m to +11.10 m
07	PTU & RI inspection cavity	Installed	+4.530 m to +16.530 m
08	Relief Tank (Bubbler Tank)	Installed	+8.140 m
09	FAK (fuel pool cooling system) heat exchanger	Installed	-4.85 m
10	FAK (fuel pool cooling system) pump	Installed	-5.4 m
11	FAK tank	Installed	-
12	JND Tank	Installed	+0.70 m
13	KAA (Intermediate circuit cooling system) heat exchanger	Installed	-
14	KPM adsorption filter	Installed	-
15	KPM Hydraulic lock tank	Installed	-3.770 m
16	KPM zeolitic filter	Installed	+2.205m

Reactor Auxiliary Building of Power Unit-2 (20UKC)

Size	: 60×66 m
Height	: +29.7 m (+34.3 m at common access area)
Foundation Work	: Foundation slab thickness 1.4 m and top of foundation slab -5.4 m
Wall thickness	: 200~800 mm
Density of concrete	: 2350~3350 kg/m^3

Construction Progress

1. Soil Improvement works up to 20 m is completed.
2. Foundation plate works of 1.4 m thick is completed.
3. Interior Wall are completed up to +4.75 m elevation. Reinforcement and Geometry works is going on from +4.75 m to +8.30 m elevation.
4. Outer Wall are completed up to +4.75 m elevation. Reinforcement and Geometry works is going on from +4.75 m to +8.30 m elevation.
5. Slab are completed up to +0.00 m elevation. Reinforcement work is going on at +8.30 m elevation.

Picture - 44: Reactor Auxiliary Building Unit-2

Equipment Installation update of Reactor Auxiliary Building Unit-2

Sl No.	Name of the equipment	Elevation	Date of Installation
1	Floor Drains Tank	+4.75 m	Ongoing
2	Check Tank	+4.75 m	21 September, 2021
3	Condensate Tank	+4.75 m	19 September, 2021
4	Electric Pump Set for Fuel Pool Filling	+4.75 m	23 June, 2021
5	Radioactive Drain Collection Tank	+4.75 m	23 December, 2020
6	Boron Containing Water Collection Tank	+4.75 m	29 February, 2020
7	Electric Pump Set for Fuel Pool Filling	+4.75 m	23 June, 2021
8	Floor Drain Water Decantate Tank	+4.75 m	29 February, 2020
9	Primary Drain And Sampling System Controlled Leakage Tank	+4.75 m	29 February, 2020
10	Check Tank for Primary Circuit Coolant Purification System	+4.75 m	21 September, 2021
11	Check Tank for Primary Circuit Coolant Purification System	+4.75 m	28 September, 2021
12	Contaminated Boron Condensate Tank	+4.75 m	19 September, 2021
13	Auxiliary Tank for Floor Drain Water Purification System	+4.75 m	17 September, 2021
14	Auxiliary Tank for Floor Drain Water Purification System	+4.75 m	12 September, 2021
15	Auxiliary Tank for Floor Drain Water Purification System	+4.75 m	05 September, 2021
16	Auxiliary Tank for Floor Drain Water Purification System	+4.75 m	05 September, 2021
17	Charging Tank of Boric Acid Solution	+4.75 m	27 July, 2021

Turbine Island of Power Unit-2

Turbine Island is consisting of Turbine (20UMA), Demineralization (20UMX) and Normal power supply (20UBA).

Construction Progress

Soil Improvement Works : Deep Soil Mixing; 20 m depth Completed

Foundation work : Concrete Bedding, Foundation and Waterproofing work are completed.

Column & Slab : 20UMA & 20UMX: All turbine set columns and Slab has been completed up to +7.80 m and +16.00 m respectively.

: 20UBA: All internal and outer wall and slab has been completed up to +7.8 m elevation.

Picture - 45: Turbine Island Unit-2

List of equipment of Turbine Building (10UMA)

Sl No.	Equipment name	Status	Position
1	Separate collector	Not started Yet	Elevation -7.250 m
2	Drainage tank	Not started Yet	Elevation -7.250 m
3	Condenser	Installation ongoing stage 1 ongoing out of stage 3	Elevation +0.000 m
4	Main Feed water electric Pump set	Not started Yet	Elevation +0.000 m
5	Moisture Separator Reheater	Not started Yet	Elevation +0.000 m
6	Condensate collector of MSR of stage-1	Not started Yet	Elevation +0.000 m
7	Condensate collector of MSR of stage-2, 4	Installation ongoing stage 1 out of stage 3	Elevation +7.8 m
8	Turbine vibration isolator	Installed	Elevation +12.24 m
9	Deaerator	Not started Yet	Elevation +20.500 m

Construction Progress of Cooling Tower

The height of the Cooling Tower is 175 m. The height of the air inlet windows is 10.3 m. Diameter of water catchment basin wall outer surface is 135.72 m. Diameter at elevation 10.300 m is 121.600 m. Diameter of layout axis of shell column racks is 128.168 m (at elevation -0.350 m). Diameter of the throat is 77.00 m. Elevation of the throat is 125.0 m. Diameter of the output cross-section is 80.88 m. Elevation of water catchment basin bottom is -2.350 m. Elevation of the circular foundation bottom is -3.850 m.

Picture - 46: Cooling Towers 11, 12, 21, 22 URA Construction in Progress

Construction Progress

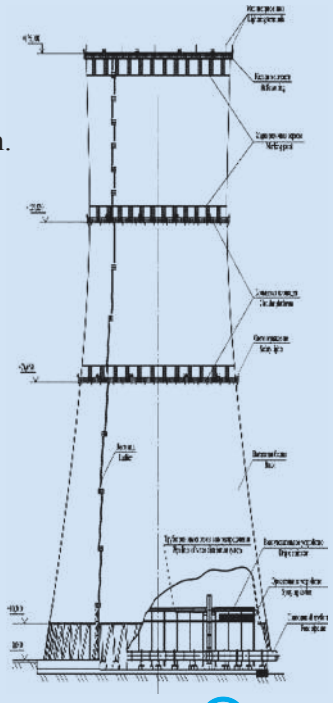

Cooling Tower – 1 Unit-1 (11URA)

- Concrete Bedding, Ring Foundation and Basin Wall are completed.
- Racker Column Installation are completed. Shell concreting ongoing +13.70 m.

Cooling Tower – 2 Unit-1 (12URA)

- Concrete Bedding, Ring Foundation are completed.
- Racker Column Installation is completed.
- Basin Slab and Wall concreting is completed.
- 1st Layer concrete shell completed.

Cooling Tower – 1 Unit-2 (21URA)

- Concrete Bedding, Ring Foundation are completed.
- Racker Column and Basin wall concreting are completed.

Cooling Tower – 2 Unit-2 (22URA)

- Ring Foundation is completed.
- 2nd Stage of Concrete bedding is completed.
- Racker Colum concreting completed.

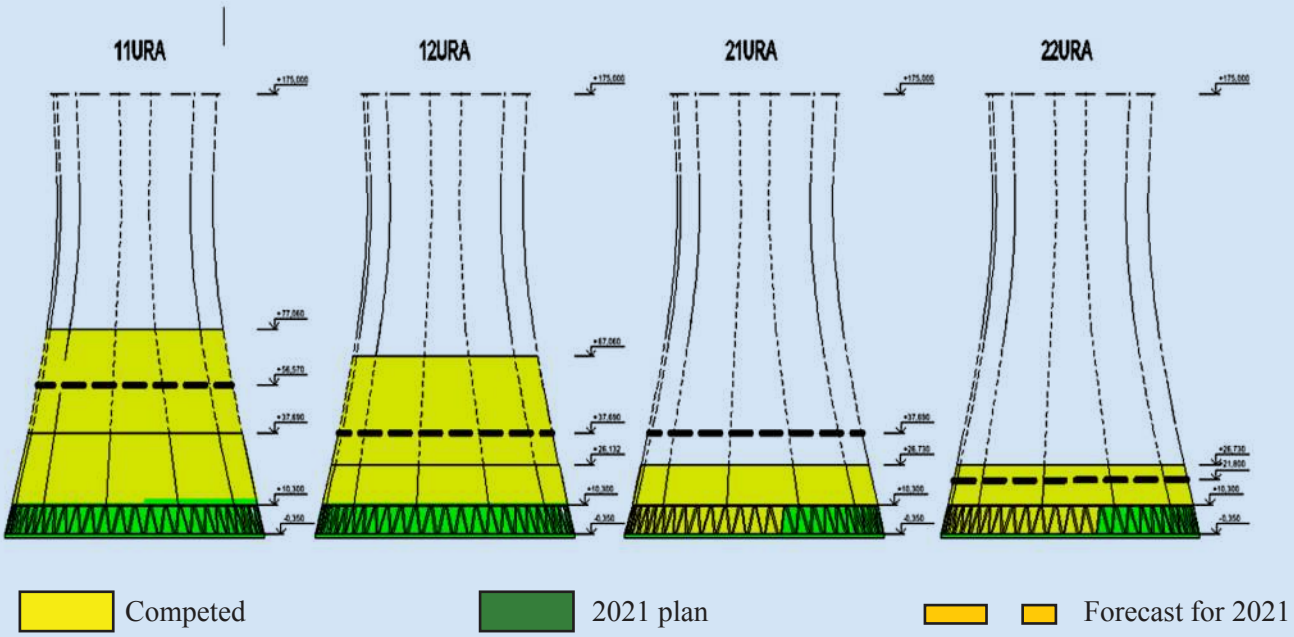

Water Intake Structure

The water intake facility is built to ensure the cooling water for operation and firefighting water of Rooppur NPP. The structure is located at Construction Erection Base-2 area and constructing as class I coast protecting structure according to Russian normative documents SP 58.13330.2020.

Construction Status:

1. Sheet piling work is completed.
2. DSM is completed.
3. Trestle foundation and installation completed.
4. Jet grouting work completed.
5. Dug well construction completed.
6. Inspection motorway of 03UPC completed.
7. Sedimentation pit work completed.
8. Fencing of the 03UPC sedimentation pit is completed.
9. Intake channel (02 UPC) distribution belt and piping work completed.
10. 01 UPC work completed completely.

Slope protection concreting work is completed up to 95%. Remaining work will be completed after the concreting of 02UPC intake channel

Picture - 47: Water Intake Structure

Cargo Terminal (Jetty)

Cargo Terminal located beside the Rooppur NPP site in the bank of Padma River, it is being used for unloading construction material and heavy equipment of Rooppur NPP. It is the largest river port in Bangladesh consisting area of more than 50,350 sqm.

Picture - 48: Cargo Terminal

Picture - 48: Cargo Terminal

Rooppur NPP Training Centre

Four storied T shaped reinforced concrete structure building Training Centre of Rooppur NPP is belongs to Industrial area of Rooppur NPP and very important to develop human resource for operation and maintenance of the plant. Initial training and Qualification Maintenance Training of NPP personnel on all fields will be conducted in Rooppur NPP Training Centre. Training Centre is equipped with standard functionality for nuclear training including full-scale simulator.

Construction Status:

Civil Works	: Civil construction works are completed
Electrical & Ventilation works	: On going.
Road Construction works	: Internal Roads construction is completed.
Fencing Work	: Fencing work is completed
Facade Installation Work	: On going.
Commissioning Works	: On going

Picture - 49: Training Centre

Picture - 50: Full Scale Simulator (Similar to the Main Control Room of Rooppur NPP)

Recruitment and Training of Rooppur NPP Operation and Maintenance Personnel

The operator of the NPP must comply with a number of national and international requirements in the areas of nuclear safety, security and safeguards. The operators of nuclear facilities must develop an organizational culture that will embrace these three fundamental requirements.

The staffing of NPP operating organization includes plant staff, headquarters staff, corporate staff, on-site and off-site management and services staff, non-nuclear headquarters staff and the staffs of the vendor country and other service provider organizations under contractual arrangement. The personnel of the plant are usually divided into six staffing areas: (1) Operations (2) Maintenance (3) Engineering and Technical Services, (4) Safety and Reliability, (5) Training and (6) Chemical Technology and RAW Handling. The NPP requires support for security and physical protection of the plant from the national organizations and operation and maintenance support from vendor sources or experiences operating organization, etc.

The initial staffing of an operating organization is significantly higher than that of similar plants in the vendor's country or other experienced countries. There are several reasons, which include among others are: redundancy of personnel in the key positions for purposes of training, significant periods of training duration at similar plants, training staff for subsequent units, the essential services that are necessary from the vendor's country and outside organizations in the initial stage. The licensing practices and requirements have an influence on the organization structure (e.g., separate turbine and reactor operator, or control room operators who are qualified for both positions). It is quite likely that existing domestic rules and regulations will not address all of the unique characteristics of an NPP, particularly for the first NPP. The new operating organization is developed based on the experiences of the operating organizations with similar technology, standard organizational and functional structure of NPP management of the vendor country.

Usually, an organizational and functional structure of a new NPP operating organization has the reflection of both local and vendor country's norms and practices. The design and organizational structure of NPP operating organization is established based on domestic rules and regulations, organizational and functional structure of the reference plant and international good practices. The operating organization of the vendor country is established based on a certain set of national rules and regulations. However, the newcomers should give emphasis on particular areas, namely quality assurance, configuration management, licensing, health and safety programmes, materials management and emergency preparedness.

BAEC is the owner organization of Rooppur NPP. The main law regarding for nuclear power project development, operation and maintenance of NPP in Bangladesh is the Nuclear Power Plant Act, 2015. The Section 4 of this Act establishes the Nuclear Power Plant Company Bangladesh Limited (NPCBL) as an Operating Organization of Rooppur NPP. According to General Contract for Rooppur NPP construction, BAEC is licensee and owner for every stage of construction and commissioning of Rooppur NPP.

Human resource development is recognized as one of the vital critical infrastructural issues for Rooppur NPP. Bangladesh mainly relies on the vendor country, Russian Federation for manpower development of Rooppur NPP. Under the provisions of the General Contract, JSC Atomstroyexport has assigned responsibility to carry out the professional training of Rooppur NPP personnel and elaborate the teaching documentation to such extent that they should acquire required professional skills (competencies) needed for all the areas of NPP construction, commissioning, operation, maintenance and repair. Within the framework of the General Contract, JSC Atomstroyexport is using the graded SAT applicable at existing NPP in Russian Federation and the NPP under construction abroad with the Russian participation, international experience and IAEA recommendations for education and training of Rooppur NPP personnel.

The total number of the personnel proposed for operation and maintenance of the two power units of Rooppur NPP is about 1927. Presently, BAEC is developing and implementing a well-structured and well-articulated workforce and HRD programme for Unit-1 and Unit-2 with cooperation of the General Contractor, JSC Atomstroyexport. A total of 1424 key technical personnel (License, Fuel-handling, Safety and Operational) including reserve 305 personnel, will be trained by JSC Atomstroyexport wherein 91 personnel will obtain license in compliance with the normative and regulatory requirements. Among 1424 personnel, a total of 851 will be trained in Russian Federation and the remaining 573 in Bangladesh by JSC Atomstroyexport. According to the requirements, a total 39 personnel had preliminary work experiences in different levels and disciplines before joining to NPCBL. Training programme of Rooppur NPP personnel are developed with consideration of the construction schedule of Rooppur NPP. The year-wise training programme is shown in Table-1 which may require adjustment due to some practical reasons.

Table 1: Year-wise training programme for Operating Personnel

Year	Number of technical personnel to be trained Under General Contract
2018	40
2019	239
2020	136
2021	212
2022	375
2023	422
Total	1424

On the other hand, administrative and common industrial personnel as well as general supporting staffs will be trained as required by the Customer's trained instructors in Bangladesh. Instructors of the training centre are being trained in Russian Federation.

In order to develop the competency of the NPCBL, necessary manpower is being recruited in accordance to the training schedule. Till today 703 technical personnel has been recruited to train them from Russian Federation. In addition, 476 technical personnel are in recruitment process. A summary on Recruitment and Training of Rooppur NPP Personnel is shown in Table 2.

Table 2: Recruitment and Training of Rooppur NPP Personnel for Russian Federation

Name of the Department	Total No. Required	Total No. Recruited	Recruitment Process	Training Received & On going
Process Management	21	23	0	23
Deputy Chief Superintendent (Management)	7	7	0	7
Division for Operation	250	119	92	130
Division for Safety and Reliability	135	110	52	82
Division for Maintenance	97	73	141	27
Division for Technical Services	14	17	0	13
Division for Training	35	40	0	32
Division for APCS and EE	307	229	102	174
Division for Chemical Technologies RW	218	85	89	50
Management	35	-	-	-
Capital Construction and Inspection				
Total	**851**	**703**	**476**	**538**

Due to covid-19 situation, it was difficult to maintain the training schedule of Table 1. The training schedule has been revised and the target for the remaining training of personnel from Russian Federation in the year 2021 (from October to December), 2022 and 2023 are respectively 92, 341 and 170. JSC Atomstroyexport will provide training 573 personnel in Bangladesh in the year 2022 and 2023.

Professional training (training for a position or profession) of the personnel provides necessary competence prior to be assigned in independent job responsibilities in accordance with regulatory and operating organization requirements. The phase-by-phase training system approach has been adopted to develop the competent manpower for Rooppur NPP. This approach enables to compensate the lack of initial basic nuclear education and experience of the personnel in operation of the NPP.

The first phase training programme includes classroom training, practical training for the relevant position and OJT at the reference NPP. The second phase training programme focuses on the differences of Rooppur NPP and reference NPP. It will be conducted in the training centre of Rooppur NPP and competence will be developed by participating in NPP construction, erection, installation and commissioning works. Knowledge will be checked within the scope of the position occupied and the permits for independent works will be obtained to the specific job position at the Rooppur NPP. For licensing personnel, pre-licensing training and license obtained procedure is being developed in collaboration with the General Contractor.

Personnel training system is developed on the basis of analysis of NPP organizational structure and job duties of the personnel. It shall provide the personnel qualification selection, theoretical and practical training, technical means of training and operating NPP units in case of on-the-job-training.

A Joint Training Advisory Commission (JTAC) was formed by both parties (Bangladesh and Russia) for the selection of trainees, arrangement of exams, assignment of positions, quality assessment of training for Rooppur NPP personnel. The JTAC meetings and inspections are conducted periodically for quality monitoring and smooth implementation of the training programme.

Training methodological support (TMS) and training acceptance procedure is developed that determines the terms and conditions of delivery/acceptance of works for training in line with the framework of the General Contract. All TMS will be developed taking into account the Russian regulatory requirements and technical documentation of the operating organization (JSC 'Concern Rosenergoatom') and the regulatory body (Rostechnadzor).

The Contractor shall be liable for the Rooppur NPP personnel training in such a way that the training of each trainee is considered to be as completed after completion of final examination, including obtaining a certificate, so that trainees are capable of performing their job duties independently, including personnel to be licensed. Detailed draft organizational structure of the Rooppur NPP has already been developed with the help of the Contractor which is already approved by the authority. The Contractor is conducting operational personnel training programme in such a way to ensure the opportunity of timely and effective participation of the personnel at the commissioning stage of Rooppur NPP.

Rooppur NPP has a training centre (TC) and it will maintain an extensive qualification maintenance programme. The TC is equipped with sophisticated and modern Full-Scale Simulator and Analytical Simulator to train the personnel for refreshment of their knowledge and skills. Moreover, about 17 equipment and system simulators will be installed at Rooppur NPP TC to train the personnel. It is hoped that during the operational stage, the personnel will have enough experience and skillful to work independently as their job duties. However, for certain key positions, specialized consultants will be required to help the operating personnel for a limited time period.

Besides developing competent workforce for Rooppur NPP, the government has also focused on the development of a long-term strategy on human resource development for the nuclear power sector of the country so that a self-dependable in producing the next generation of workforce for Rooppur NPP as well as workforce for implementation of new NPP projects and operation of the new NPPs in the country.

Nuclear Safety is the First Priority of Building NPP

An appropriate and sustainable nuclear infrastructure is the precondition for construction of NPP. However, developing nuclear power infrastructure in a newcomer country is a challenging task. But there are global solutions for developing nuclear infrastructure. The IAEA, vendor country and international community are very much supportive to the newcomer countries in building their national nuclear infrastructure. The IAEA has developed guidelines and established standards of safety for protection of health and environment and the newcomer countries are able to regulate, constructand operate NPP safely. Moreover, the IAEA monitors the NPPs of the IAEA member states to ensure that their operations are in line with IAEA safety standards and to ensure an appropriate level of safety.

National Nuclear Infrastructure for Building Rooppur NPP

There are several stages in the process of introducing nuclear power. These include development of nuclear policies and regulations, feasibility studies, technology evaluation, requests for proposals and evaluations or contract negotiations, contracts and financing, supply, construction, commissioning, operation and finally decommissioning. Comprehensive and systematic planning, preparation, investment, human resources and timely development of the nuclear infrastructure are the essential conditions for development of a nuclear power project.

The IAEA Milestones approach helps a newcomer country to understand the associated commitments and obligations of a nuclear power programme. It provides a framework for the development of the infrastructure necessary for a nuclear power programme, which considers 19 specific infrastructure issues, three Phases of development and three Milestones. The basic nuclear infrastructure requires until the issue of the construction license and achievement of Milestone 2 and a fully developed nuclear infrastructure will be required for construction and commissioning of a NPP, the Phase 3 activities and beyond.

Among 19 infrastructure issues, the issues with regard to safety and security and safeguards (3S) is for nuclear governance, i.e., the institutional arrangements for regulating the use of nuclear energy. The IAEA generally considers the 3S as essential elements in all life cycle stages of nuclear facilities.

Nuclear materials are safe and secured if they are used under control and exclusively for peaceful purposes. Safety and securityare mainlybased on an appropriate nationallegal and organizational framework and international legal instruments for safety and physical security of nuclear and radioactive materials and nuclear facilities, including national regulatory oversight of safety and physical protection and national law enforcement in case of security threats. Safeguards, however, represents an international legal commitment, determined by safeguards agreements and additional protocols between States and the IAEA. Security and safeguards are part of the nuclear non-proliferation regime whose purpose is to prevent the spread of nuclear weapons.

The principles and requirements of the International Law on Nuclear Safety (Convention on Nuclear Safety, Joint Convention on the Safety of Spent Fuel Management and on the Safety of Radioactive Waste Management, Convention on Early Notification of a Nuclear Accident, Convention on Assistance in the Case of a Nuclear Accident or Radiological Emergency) and the International Law on Nuclear Security and non-Proliferation (Convention on the Physical Protection of Nuclear Material, the Treaty on the NPT and the Protocol Additional to the Safeguards Agreement, International Convention for the Suppression of Acts of Nuclear Terrorism) have provided guidelines and drawn obligations of the Contracting Parties to achieve a high level of nuclear safety, nuclear security and safeguards of nuclear materials. Each State Party must establish, implement and maintain an appropriate nuclear safety system, physical protection regime applicable to radioactive and nuclear material and nuclear facilities under its jurisdiction according to the principles and requirements of the International Law on Nuclear Safety and the International Law on Nuclear Security and non-Proliferation.

Bangladesh adopted the IAEA milestone approaches for Bangladesh nuclear infrastructure development.

1. Nuclear Safety, Security and Safeguards Infrastructure in Bangladesh

Atoms hold unimaginable sources of power. This power can bring great benefits to mankind, contribute to peace, and help us attain our sustainable development goals. Bangladesh has limited indigenous energy resources. Meeting future energy demand and the desire for energy diversification are the primary motivation behind the decision of Bangladesh to incorporate nuclear power into the domestic energy mix. Bangladesh always recognizes that the right to the peaceful uses of nuclear energy and technology comes with responsibility to ensure nuclear safety.

Internationally the IAEA 'works with its Member States and multiple partners worldwide to promote safe, secure and peaceful nuclear technologies.' After the Three Mile Island and Chernobyl accidents, the IAEA and international experts had a series of expert level meetings from 1992 to 1994, and the IAEA Convention on Nuclear Safety (CNS) was drawn up. The CNCwas adopted in Vienna on 17 June, 1994 and entered into force on 24 October, 1996. The objectives of this Convention are to achieve and maintain a high level of nuclear safety worldwide, to establish and maintain effective defenses in nuclear installations against potential radiological hazards and to prevent accidents having radiological consequences. The government of Bangladesh signed the CNS on 21 September, 1995, which was formally accepted and entered into force on 24 October, 1996. The Article 8 of the CNS obliges a State to have a nuclear regulatory body that has adequate authority, competency and financial and human resources to fulfill the assigned responsibilities. It further states that "Each Contracting Party shall take appropriate steps to ensure an effective separation between the functions of the regulatory body and those of any other body and organization concerned with the promotion of utilization of nuclear energy." When it comes to the responsibility for safety, it is operator who bears prime responsibility for safety and security of the nuclear installation. On the other hand, the role of the regulatory body is to set standards and enforce them within the legal framework. It is thus important for both the operator to pursue the common goal of safety and ensure risk-free operation of a nuclear installation.

Bangladesh recognized that the national legislation should be in line with modern regulatory practice and it must cover all aspects of nuclear safety, nuclear security, safeguards of nuclear materials in line with the relevant IAEA guidelines and recommendations. Bangladesh Atomic Energy Regulatory Authority (BAERA) Act, 2012 was passed in 2012 for dual purposes:

(i) establishing an effective independent regulatory authority and

(ii) introducing nuclear law in the country for successful introduction of nuclear power programme. The BAERA Act, 2012 has established the basis for the development of legal and regulatory framework of nuclear safety, nuclear security and safeguards system.

Under the provision of the Article 11 of the BAERA Act, Bangladesh Atomic Energy Regulatory Authority (BAERA) is the competent authority in Bangladesh to ensure the compliance of nuclear safety in any nuclear installation. The National Legislative requirement on nuclear and radiological safety for all activities related to the peaceful use of atomic energy in Bangladesh stems primarily from the Section 18 of the BAER Act-2012 that imposes restrictions on certain activities without having appropriate form of authorization by the authority. Moreover, Article-30 of the explicitly states that it is the sole responsibility of an authorization holder to ensure nuclear safety in his/her nuclear installation. The same Article has also given BAERA the power to make regulations on the requirements of nuclear safety. There is also a provision in the BAERA Act-2012 that allows the NSRC rules (1997) made under the repealed NSRC Act 1993 continue to be in force as if made under the present Act until comprehensive and detailed regulations are in place under the BAERA Act-2012. These rules (NSRC Rules 1997) also provide list of applicable standards, code and guides relevant to different stages of nuclear installations to ensure nuclear safety. Further to this, a number of regulations is in the final stage of the development process that is specifically identified to assist the authorization process and addresses the safety principles in details to ensure nuclear safety in light of the present knowledge base of the post-Fukushima era.

Pursuant to Article 5 of the CNS, the National Report is being prepared by Bangladesh in accordance with the 'Guidelines Regarding National Reports under the Convention on Nuclear Safety' issued as information circular INFCIRC/572/Rev.4 and submitted for reviewing by the Contracting Parties. The National Report reflects/ covers the activities associated with the research reactor as well as the latest developments in the construction of Rooppur NPP in Bangladesh and indicates how it meets the obligations of each of the articles of the Convention. The Report shows how Bangladesh has adhered to its obligations under Articles 6 through 19 of the Convention.

The Convention on the Physical Protection of Nuclear Material (CPPNM), the only legally binding international undertaking in the area of physical protection of nuclear material, was adopted in 1979 and entered into force in 1987. It focuses on the physical protection of nuclear material used for peaceful purposes during international transport, but does not cover the protection of nuclear facilities or nuclear material in domestic use, storage and transport. The Amendment to the Convention on the Physical Protection of Nuclear Material (Amendment to the CPPNM) entered into force on 8 May, 2016. The IAEA Director General Yukiya Amano described the Amendment to the CPPNM as "the single most important step which the world can take to strengthen nuclear security," it expands the scope of the Convention adopted in 1979. The Amendment reduces the risk of a terrorist attack involving nuclear material and the smuggling of such material. It also reduces the risk of an attack on a nuclear power plant, other nuclear facilities or nuclear material in transport. The CPPNM and its Amendment apply to nuclear material used for peaceful purposes.

Bangladesh recognizes the benefits of universal adherence to the CPPNM and the Amendment to the CPPNM. The ratified CPPNM on 10 June, 2005 and become the party to the Amendment to the CPPNM on 04 July, 2017. Bangladesh ratified the International Convention for the Suppression of Acts of Nuclear Terrorism on 14 September 2005. The Convention vests responsibility for the physical protection of nuclear material or nuclear facilities in the holders of relevant licenses or other authorizations.

BAER Act 2012 establishes the basis for the legal and regulatory development of physical protection system of nuclear materials. The Article 33(1) makes a provision that the physical protection of nuclear material and nuclear installation shall be ensured according to the requirements of the CPPNM. The Article 33 (2) states that the authorization holder shall ensure the physical protection of nuclear installation, nuclear material and radioactive material pertaining to the site selection, design, construction, commissioning, operation and decommissioning of nuclear installations and upon the manufacture, import, export, transportation and storage of nuclear material or radioactive material under this Act. Article 33 (3) also states that the authorization holder, who, conducts commissioning, operation and decommissioning of nuclear installation or manufacture, import, export, transport, use and store nuclear material or radioactive material, shall prepare and implement a physical protection plan, and adopt internal rules and instructions on physical protection, and designate an officer in charge of physical protection. BAERA is the National Security Regulator for Radioactive and Nuclear Material. The Authority has the responsibilities to ensure the proper compliance of the safety and security or radioactive materials by the authorization holder and the terms and conditions in this respect shall be prescribed by regulations.

Our Father of the Nation, Bangabandhu Sheikh Mujibur Rahman in his Statement at the UN General Assembly on 25 September, 1974 said, "Peace to sustain must be, peace based upon justice". It is with this conviction, Bangladesh solely committed to the peaceful uses of the nuclear energy. Bangladesh has joined the Non-proliferation Treaty (NPT) in September 1979. In this connection Bangladesh has also signed IAEA safeguards agreement that has come into effect in June 1982. To be transparent and to show further respect for international safeguards Bangladesh has signed protocol additional in March 2001. As a signatory of both IAEA Safeguards Agreement and Protocol Additional in connection with NPT Bangladesh is fully committed for peaceful uses of atomic energy in the country for ensuring safety and security of all radioactive sources, nuclear materials and practices. Bangladesh strongly supports the inalienable rights of all state parties to the NPT to develop, research, production and use of nuclear energy for peaceful purposes without discrimination in accordance with Article IV of the Treaty. As a party to the Treaty, Bangladesh has undertaken to ensure that peaceful nuclear energy uses meet the relevant non-proliferation requirements (of Articles I and II).

Bangladesh, as a matter of policy, has incorporated in its legislation the NPT as well as other relevant international/ bi-lateral conventions and agreements for compliance by any person or practice dealing with radioactive sources and nuclear materials. Bangladesh has established and maintaining a system of accounting for and control of all nuclear materials in the country.

The BAER Act 2012 has incorporated the NPT as well as other relevant international/bi-lateral conventions and agreements for compliance by any person or practice dealing with radioactive sources and nuclear materials. The Article 34 of this act appoints BAERA as an organizer and a co-coordinator for implementing the obligations of Bangladesh pursuant to the Treaty and the Additional Protocols to this.

Bangladesh has consistently assured and reassured to international community that its nuclear programme is peaceful. It has taken several concrete steps to demonstrate this commitment through complying with a number of national and international requirements in the areas of nuclear safety, security and safeguards.

Steps 1: Bangladesh and IAEA Safeguard Agreement and ratification of IAEA Additional Protocol

Bangladesh nuclear programme is very transparent. The country has signed all the major international treaties, agreements and protocols related to the nuclear non-proliferation. Bangladesh concluded the IAEA Safeguard Agreement in 1982. The country ratified the IAEA Additional Protocol to comprehensive safeguards agreements on 30 March, 2001. This agreement grants IAEA inspectors expanded rights of access to the country's nuclear programme and physical access of the nuclear and nuclear related facilities in the country. As a signatory of both IAEA Safeguards Agreement and Protocol Additional in connection with NPT Bangladesh is fully committed for peaceful uses of atomic energy in the country.

Steps 2: Domestic legal arrangements for regulating the peaceful uses of nuclear energy

One of the cornerstones of nuclear energy uses is the Bangladesh Atomic Energy Regulatory Act, 2012. This legislation was formulated based on the IAEA Handbook of Nuclear Law and the existing Nuclear Safety and Radiation Control Act, 1993. Inputs from IAEA experts and other international and national experts were taken during formulating the draft of the Act. The principles set forth in this Act is a good account of nuclear materials regulatory and management system in Bangladesh.

The BAER Act, 2012 provides clear guidance for the entire spectrum of nuclear activities. The provisions of the Act, inter alia, cover nuclear safety, security, safeguards of nuclear as well as radioactive materials (Chapter IV), emergency preparedness and remedial measures (Chapter VI), civil liability for nuclear damage in the event of an accident (Chapter VII) and inspection and enforcement (Chapter VIII). The BAERA is given responsibility to conduct activities relating to the implementation of international contracts, agreements, protocols and convention (in which Bangladesh is a contracting party) on safeguards and physical protection including illicit trafficking of nuclear and radioactive materials, nuclear safety, radiation protection and radiological emergency situation.

The Article 18(c)-(d) of BAER Act impose restrictions to procure, produce, own, import, export, possess, use, transport, process, reprocess, market, transfer, move, store, abandon or dispose of any nuclear material, specified equipment and non-nuclear material and or source material, radioactive waste and spent fuel and to conduct research on the matter connected therewith without taking authorization from the Authority.

The Authority may take all necessary measures including authorization procedures to control the import and export, re-export, transit and transshipment of nuclear material, specified equipment a non-nuclear material, radioactive material and equipment and technology relating there to prescribed by it in order to protect the sovereignty and security of Bangladesh and to take control over them (Article 24).

The foundation of the legal and regulatory with regard to safety issues are established in Bangladesh. The country has also taken necessary measures to address domestic and international concerns of nuclear safety at an institutional as well as institutional and project level.

Step 3. Commitment of Hon'ble Prime Minister in the 74th Session of the United Nations General Assembly

The statement of Hon'ble Prime Miniter H.E. Sheikh Hasina in the 74th Session of the United Nations General Assembly in September 2019 that "We are building our first ever nuclear power plant in Rooppur leveraging on the principle of peaceful use of nuclear energy." H.E. Prime Minister also stated that "Bangladesh's commitment to peaceful use of nuclear energy is fortified by its consistent position against nuclear armament. We have just ratified the Treaty on the Prohibition of Nuclear Weapons as the 26th country of the world". The statement of the Prime Minister in the Session of the United Nations General Assembly has provided the international community with stronger assurances that the Bangladeshi nuclear power programme is peaceful.

Steps 4: Bangladesh-Russian Nuclear Cooperation Agreement for Fresh fuel supply and spent nuclear fuel management for Rooppur NPP

It is a reality that the development of nuclear energy is not necessarily stepping-stone to nuclear weapon acquisition. But history shows that it can be, especially if the sensitive nuclear technologies of Uranium enrichment or Plutonium reprocessing are pursued either openly or secretly. The government of Bangladesh under the leadership of Hon'ble Prime Minister Sheikh Hasina has made it clear that the country is not planning to introduce these sensitive technologies, rather the country is planning to purchase fresh nuclear fuel for Rooppur NPP and also to send back to the fresh fuel supplier country. It is not economically feasible to develop enrichment and reprocessing facilities to serve a modest nuclear energy programme of Bangladesh.

Bangladesh signed an Intergovernmental Agreement (IGA) with Russian Federation for cooperation concerning the construction of two VVER-type reactor power units at Rooppur NPP site on 2nd November, 2011. The Article 8(1) of this IGA has made an obligation for supply of ready fuel assemblies during the entire period of Unit-1 and Unit-2 of Rooppur NPP by Russian Federation. The Article 8 (2) has made another obligation for sending back the spent fuel from the Rooppur NPP power units to Russian Federation. These obligations of the IGA have positive nuclear security and non-proliferation implications.This cooperation agreement has provided a solution related to back-end fuel cycle services. The country's nuclear programme is very transparent and absolutely a peaceful one.

2. Nuclear Infrastructure Development-Organizational Aspects

Many organizations and entities have roles and responsibilities in establishing nuclear infrastructure. They are government ministries, nuclear and environmental regulatory authorities, owner/operating organization, grid operators, research organizations, academic institutions and the public. Among these organizations and entities, they are deeply involved in the development of nuclear energy. They are government, nuclear energy regulatory authority and the owner/operator of the nuclear plant. Each of this organization or entity has specific role to play in each of the three Phases of the nuclear power programme. The responsibilities of these entities are changing as the programme is moving advances.

2.1. Nuclear Energy Programme Implementing Organization

Government policy must be supportive for the entire life-cycle of the NPP project. The government of a newcomer usually creates an administrative provision or coordination mechanism in accordance with the IAEA concept of Nuclear Energy Programme Implementing Organization (NEPIO). The government assigned a ministry as a focal ministry or administrative ministry with the responsibility of the competent authority of the nuclear power programme.

To realize the establishment of national nuclear power infrastructure in an appropriate, phased, coordinated and comprehensive manner, Bangladesh established NEPIO in the form of high level Government Committees (National Committee, Technical Committee and Working Committee) have been formed that establishes overall administrative provision for coordinating the activities on 19 infrastructure issues, developing relevant policy and strategy on 'Rooppur NPP' project development and implementation, monitoring the progress of the

project activities and providing recommendations and directives required for successful implementation of the project. The Hon'ble Prime Minister chairs the National Committee whose terms of reference include providing necessary directives and policy decisions on nuclear infrastructure program, deciding ownership pattern and project execution approach, selecting funding mechanism, strategic partnership and development of contract arrangements for 'Rooppur NPP', capacity building and technical competency development, nuclear safety and regulatory infrastructure development, etc.

The NEPIO for Bangladesh has been playing central roles in the development of nuclear power project and national nuclear infrastructure development. The National Committee on the Rooppur NPP project implementation Headed by Hon'ble Prime Minister H.E. Sheikh Hasina provided necessary guidance and directives on the project modality, project ownership pattern, funding and financing scheme, manpower development and national infrastructure development.

The timely development of the nuclear infrastructure is aimed at the successful and safe implementation of the NPP project throughout its entire life cycle. Creation of specific new requirements on the country's existing infrastructure is required for the first NPP project. It is a challenge for a developing country for creation of an appropriate nuclear infrastructure. Experience suggests that the time from the initial consideration of the nuclear power option by a country to the operation of its first nuclear power plant is about 10-15 years.

The Hon'ble Prime Minister Sheikh Hasina presided over the 1st, 2nd, 3rd and 4th meeting of the National Committee on Rooppur Power Plant Project held at her office on 2011, 2012, 2013 and 2016, respectively. The decisions of the National Committee have established the governmental policy directions in the following areas:

a. National commitment to a nuclear power programme;
b. Involvement of the necessary stakeholders and public outreach;
c. Legal and regulatory framework including licensing and compliance;
d. Adherence to international legal instruments and bilateral agreements;
e. Civil liability for nuclear damage;
f. Safety, security, safeguards implementation;
g. Spent fuel and nuclear waste policy;
h. Regulation and strategic management of the national electrical grid;
i. Developing and maintaining the human resources required to manage the programme.

Picture - 51: Hon'ble Prime Minister presided over the 3rd meeting of the National Committee on Rooppur Power Plant Project held at her office on August 07, 2013.

Bangladesh has established Bangladesh Atomic Energy Commission (BAEC) as NPP Owner Organization/ Project Developer, Bangladesh Atomic Energy Regulatory Authority as Nuclear Regulator, different laboratories of BAEC as technical support organizations and Nuclear Power Plant Company Bangladesh Limited as NPP Operator of BAEC for successful implementation of nuclear power programme of the country.

2.2. Owner Organization/Customer Organization and Rooppur NPP Project Development

The focal point of a nuclear power programme is the NPP Owner Organization or the Operator of a nuclear facility.The NPP Owner Organization/NPP Operatoris responsible for development of NPP project and signing necessary contracts with contractors and suppliers for project implementation. NPP Owner Organization is also known as the NPP project developer. It may be an existing Atomic Energy Commission or utility or a specially established NPP Project organization. The NPP Project developer/NPP Project Organization and the NPP Operator must comply with a number of national and international requirements in the areas of nuclear safety, security and safeguards. These requirements should be reflected in national laws and in regulations (including those from nuclear regulatory bodies, security organizations and other institutions). The NPP Owner Organization/ NPP Project organization/NPP Operator or nuclear facilities must develop an organizational culture that will embrace these three fundamental requirements in the areas of nuclear safety, security and safeguards.

BAEC was formed by the Presidential Order-15 of 1973 with the visionary initiative of the Father of the Nation, Bangabandhu Sheikh Mujibur Rahman. Since then, BAEC has been keeping itself engaged in the promotion of application of atomic energy for peaceful purposes. It's one of the missions is implementation of nuclear power programme in Bangladesh. Soon after the independence, the government of Bangladesh under the leadership of the Father of our Nation Bangabandhu Sheikh Mujibur Rahman freshly took the initiative to establish the Nuclear Power plant at Rooppur.

With growth in demand and grid capacity since then, a much larger plant looked feasible. The government under the Leadership of Hon'ble Prime Minister H.E. Sheikh Hasina expressed its firm commitment to build Rooppur NPP in 1997. A significant progress in Rooppur NPP project planning and implementation was made during 1997-2001. Several meetings were held Chaired by the then Prime Minister, H.E. Sheikh Hasina and decisions were taken to expedite implementation of the Project.

Nuclear Power and Energy Division, BAEC was actively involved in various activities of nuclear power programme through IAEA assistance. Bangladesh participated the relevant IAEA events for sharing its experiences of energy system planning focusing on nuclear power. Bangladesh conducted nuclear power programme feasibility study through participation in the IAEA regional projects, namely RCA Projects during 2000-2008. The economic assessment of nuclear power generation in Bangladesh was performed considering all components of the costs and technical parameters for the lifetime of the NPP during 2000-2008 through IAEA cooperation. The WASP (Wien Automatic System Planning Package), ENPEP (Energy and Power Evaluation Program) and MESSAGE (Model of Energy Supply Systems and their General Environmental Impacts) were employed for analyses of the power system of Bangladesh. The IAEA also developed several guiding documents to assist Member States with feasibility studies including planning and technical evaluation of the electrical grid, preparing the environmental impact assessment and reviewing technology options.

Bangladesh analyzed therole of nuclear power generation and the competitive range for inclusion of nuclear energy in the generation mix of the country and presented to the IAEA. These analyses demonstrated that the nuclear option in the context of the country's national energy policy which might include such drivers as diversifying the energy supply, reducing greenhouse gas emissions, increasing energy independence, reducing dependency on fossil fuels, reducing energy imports and other economic considerations. Bangladesh justified the role of nuclear power and sought IAEA assistance for infrastructure development. The IAEA approved a technical assistance project in 2009 for Bangladesh infrastructure development to build NPP.

In May 2010 an intergovernmental framework agreement was signed with Russian Federation, providing a legal basis for nuclear cooperation in areas such as siting, design, construction and operation of power and research nuclear reactors, water desalination plants and elementary particle accelerators. Other areas covered included fuel supply and wastes. Based on the provision of the framework agreement on 2 November, 2011, an inter-governmental agreement (IGA) between the governments of Bangladesh and Russian Federation was signed to build nuclear power plant in Bangladesh. Under the provision of the IGA, BAEC is the Customer organization of Rooppur NPP and Ministry of Science and Technology as the Competent Authority. JSC Atomstroyexport is the General Contractor and the State Atomic Energy Corporation, ROSATOM is the competent authority of the Russian Federation.

The Presidential Order 15 of 1973 of Bangladesh and the IGA between the Government Republic of Bangladesh and the Government of Russian Federation on Cooperation concerning Construction of nuclear Power Plant, 2011 and Nuclear Power Plant Act, 2015 appointed BAEC as the Owner organization of NPP in Bangladesh. BAEC is the Rooppur NPP project developer.

Nuclear power project development and the nuclear power infrastructure development are closely related. Firstly, Bangladesh focused on establishment of basic infrastructure for developing NPP project. During period 2009-2012, the development of basic nuclear infrastructure has been initiated (Phase-1 and Phase-2 activities) and the pre-project activities, the site resources investigation of Rooppur NPP were performed. Bangladesh had adopted a two-stage construction approach for Rooppur NPP, the preparatory construction stage activities, which requires the basic nuclear infrastructure development (completion of Phase-1 and Phase-2 activities and respectively, achievements of Milestones-1 and 2) and the construction and commissioning of Rooppur NPP that requires full developed nuclear infrastructure (completion of Phase-3 activities and achievement of Milestone-3).

The preparatory construction activities included feasibility evaluation, site characterization, environmental impact assessment, various on-site engineering studies, development of pre-design and design documentation of Rooppur NPP and the priority civil construction and erection works such as construction of amenities and office buildings, roads, security fences, and storage facilities.

BAEC has developed competency for developing contract documents with the assistance of the IAEA.Four different contracts with JSC Atomstroyexport were signed for the preparatory phase: (1) Contract No. 1 № 258/1110500, dated 27.06.2013 on Design and Survey Works, (2) Contract No. 2 № 258/1308800, dated 02.10.2013 on Design and Survey Works, (3) Contract No. 3 № 258/1310000, dated 05.06.2014 on Construction and Assembly Works and (4) Contract No. 4 № 77-258/1413100, dated 07.01.2016 on Construction and Assembly Works.BAEC implemented the preparatory phase Rooppur NPP project successfully.

A team of along with the experts of different organizations/ministries have consulted with the General Contractor JSC Atomstroyexport, Russian Federation and finalized the General Contract documents. Under the provision of the IGA, BAEC and JSC Atomstroyexport (Rosatom Engineering Division) signed the General Contract on Rooppur NPP Construction (No. 77-258/1414800) on 25 December, 2015 for construction of Rooppur NPP with two VVER-1200 reactors with a total capacity of 2,400 MW. This is an evolutionary project of Generation III+ that fully meets international safety requirements. The General Contract for construction of Rooppur NPP is an EPC type contract which includes the development of working documentations using VVER-1200 reactors, construction work and erection work, supply of equipment and materials for Rooppur NPP, nuclear fuel for initial loading and two reloading, education and training of Rooppur NPP operational personnel.

To finance the construction of Rooppur NPP, the governments of Bangladesh and Russian Federation signed an Intergovernmental Credit Agreement (IGCA) for the provision of a $11.38 billion Russian loan which will cover about 90 percent of the $12.65 billion (equivalent to Tk 101,200 crore) for construction cost of Rooppur NPP with a loan repayment plan, spanned over 21 years of plant operation. Bangladesh government has approved about 10% of the contract prices from its own sources to make advance payment to the general contractor at the preparatory phase contracts and the general contracts for Rooppur NPP build.

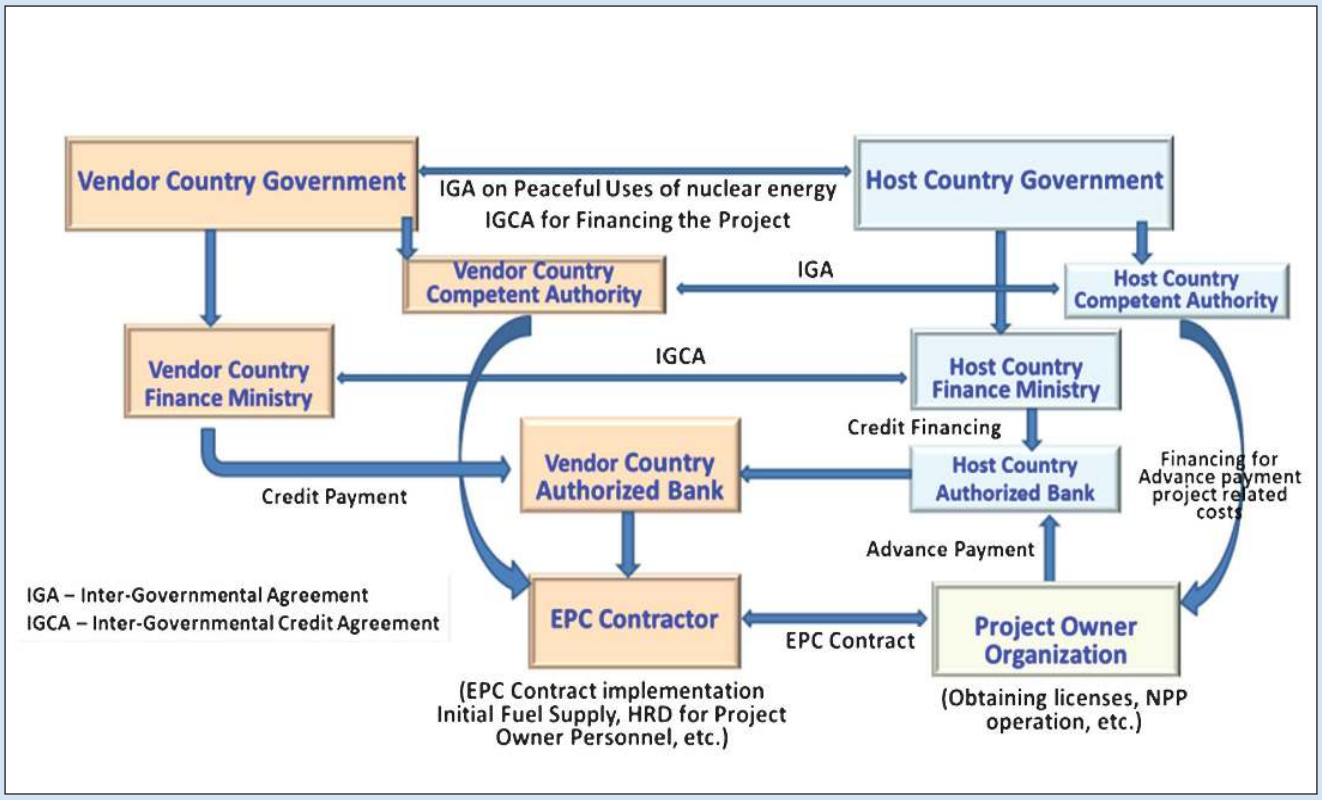

Picture - 52: Contractual Model of Rooppur NPP Project

2.3. Establishment of Nuclear Safety and Regulatory Infrastructure

Bangladesh Atomic Energy Commission (BAEC), which was established in 1973 by a Presidential Order for the promotion of the peaceful uses of atomic energy through executing all possible activities, such as research work, generation of electricity via nuclear power plants, etc. It was also empowered BAEC to control, regulate and supervise all matters related to nuclear safety and radiation protection matters in Bangladesh through the promulgation of the Nuclear Safety and Radiation Control Act of 1993. A separate division was created under the umbrella of the BAEC, named Nuclear Safety and Radiation Control Division, to regulate all nuclear and radiation related activities in Bangladesh including that carrying out by the BAEC itself. To effectively control the activities under its jurisdiction, Nuclear Safety and Radiation Control Rules was notified in 1997.

The early regulatory infrastructure for nuclear power of Bangladesh was based of Nuclear Safety and Radiation Control (NSRC) Act, 1993 and NSRC Rules 1997. It was established based on the IAEA BSS 115, overlooking other Safety Standards. Since then, it was the only legal and regulatory basis for all nuclear and radiological activities until 2012, when the government took measures to make a comprehensive and robust framework to ensure safe and secure nuclear energy production in the country, through promulgation of Bangladesh Atomic Energy Regulatory Act-2012 to address the shortcomings in the repealed NSRC act-1993. This new act, which was developed, based on the IAEA Handbook on Nuclear Law.

Bangladesh has strengthened national nuclear regulatory infrastructure to ensure safe and secure applications to nuclear techniques and building the country's first nuclear power plant. Bangladesh established an independent 'Bangladesh Atomic Energy Regulatory Authority' for the regulation of nuclear safety, radiation protection, transportation and waste safety and the civil liability for nuclear damage. Moreover, this Act allows BAERA to appraise safety standards, protection from radiative hazards, waste management, etc. The authority has the primary responsibility of ensuring the health and safety of the general public and the plant workers against any

harmful effects arising from peaceful uses of nuclear energy. In order to carry out this responsibility, the authority needs to

(i) establish regulatory standards, codes and criteria

(ii) review and evaluate the safety analysis reports

(iii) issue licenses and

(iv) inspect the licensee's facility to ensure that the design, manufacture, installation and operation conform to specified rules and regulations.

BAERA has established the system of licensing. It has established the requirements and legal provisions of licensing. Article 18 and 19 of the BAER Act-2012 specifies the requirements and process for obtaining license from the Authority. The Article 21 of the Act prescribes the general procedure for issuing authorization. These authorizations are issued by BAERA on the basis of its review and assessment process. The authorizations are issued for the major stages like Siting, Construction, Commissioning, Operation and Decommissioning and these authorization types are known as licenses. BAERA has issued the Siting License for the two units of VVER-1200 reactor at Rooppur NPP in July 2016 to Rooppur NPP to investigate site preparation task before the main construction work. BAERA also issued the Design and Construction License to begin construction of Unit-1 of Rooppur NPP and Design and Construction License of Unit-2 of Rooppur NPP in November 2017 and July 2018, respectively.

BAERA also established the system of regulatory inspection and assessment. BAERA conducts inspections to make sure that the authorization holder is in compliance with the conditions set out in the authorization and all applicable regulations, codes and standards.

In addition to the BAER Act-2012, owner/operator of any nuclear installations must abide by other relevant laws/acts in the country; for instance, Environmental Conservation Act-1995 regulates environmental impact of these facilities, The Disaster Management Act-2012 regulates the role of different organizations and management schemes in case of natural and manmade disasters that encompass nuclear and radiological incident/accidents, etc.

2. Rooppur NPP Project Management

The construction of a NPP requires huge preparation and years of preparatory work. One of the biggest challenges is completion of preparatory construction activities and another challenge is how to meet the requirements of the licensing obligations (Siting License and the Design and Construction License). The support of the experienced contractor or vendor isfor timely completion of the preparatory construction activities.

Bangladesh decided to develop a construction approach for Rooppur NPP project that correlates between preparatory construction works and licensing activities on one hand and construction of NPP on the other. Taking into account the domestic legal and regulatory conditions to obtain licenses, industrial base, availability and competence of human resources for managing the construction project, national resources and economic and environmental condition to support NPP build, a Two-Stage Contracting Scheme has been adopted for Rooppur NPP. The first-stage contracts cover the detailed siting activities, engineering surveys and environmental studies, assessment and definition of the related design bases, preparation of documentation packages of the licensing activities, site development works and construction and erection of the facilities required for construction of NPP. The second-stage contract is the General Contract, which covers all the activities starting from detailed design, procurement, construction, to commissioning and handover of the plant to the customer.

The nuclear power project management is a complex task.Core competency has to be maintained for management of the pre-project activities and it isinevitable to retain the experience and expertise of that Project Management

Unit (PMU) for the subsequent phases of the project. In case of Bangladesh, the pre-project activities, preparatory phase construction activities and construction phase activities of Rooppur NPP were carried out under three separate annual development projects of the government.

BAEC has a basic infrastructure for nuclear power programme long before. Nuclear Power and Energy Division (NPED) of BAEC was primarily responsible for carrying out all project related activities before formal creation of the project management unit (PMU).

2.1. Project Management during Pre-Project Activities

In the past, several initiatives for planning and implementation of Rooppur NPP project were taken. The NPED has played role as the project directorate. It has been maintaining the core competency for project planning and implementation.

BAEC formed PMU for pre-project activities of Rooppur NPP by the existing manpower of NPED. The pre-project activities of Rooppur NPP were carried out under Annual Development Project 'Accomplishment of Essential Activities to Build Rooppur Nuclear Power Plant' project. Through management of this project, the PMU has got adequate training and practical experiences and developed capacity and infrastructure for project management. The pre-project activities were performed during the period 2009-2012. The PMU of BAEC has some 20 to 30 personnel for pre-project activities. It involved several national organizations for site resources investigations.

2.2. Project Management-Preparatory Construction Phase

The government approved theannual development project 'Construction of Rooppur Nuclear Power Plant (First Phase)' for the project period from April 2013 to December 2017.

Due to the scope of the activities, the PMU the Annual Development Project 'Accomplishment of Essential Activities to Build Rooppur Nuclear Power Plant' BAEC had expanded gradually with staffing from other divisions and also through recruitment for Rooppur NPP within BAEC. Several national training courses and workshops were organized for PMU with the IAEA assistance for developing competency in NPP project management. The manpower was trained under fellowship and scientific visit programmes through IAEA TC projects and bilateral assistances from the Russian Federation and India.

The manpower of the PMU of the preparatory phase of Rooppur NPP was about 100 in which about 50% were technical personnel. The project was successfully implemented within the time schedule and budget.

2.3. Project Management-Construction Activities after First Concrete Pouring

The PMU of the Construction of Rooppur Nuclear Power Plant (First Phase) project assigned responsibilities for developing the project documentation of the construction of Rooppur Nuclear Power Plant. The project documents established a project management setup for management of construction work of Rooppur NPP. BAEC developed the PMU based on the IAEA guidelines of owner's organization in a turnkey contract approach. A total of 370 manpower is approved for this management unit. The manpower of the PMU is attached from BAEC and NPCBL. The head of the PMU of BAEC is the Project Director. The PMU is comprising of experts/ staffs with diverse roles and responsibilities. Under project director, there are deputy project directors and heads who are assigned to support the project director in different areas: schedule, contract and technical management, construction site management, engineering coordination, quality management, human resource management, licensing management.

The main tasks and responsibilities of the PMU of the Customer organization, BAEC are as follows.

1. Technical supervision of the capital construction activities of industrial and non-industrial Rooppur NPP facilities;

2. Monitoring, controlling, reviewing and adapting necessary project planning and project implementation schedules (Level-1 and Level-2 schedule) and submitting reports periodically to the Customer Organization and also monitoring, reviewing and accepting Level-3 and Level-4 schedule of the sub-contractors and General Contractor;

3. Reviewing and approving engineering and design documentation, working documentation, work execution plan, quality protocols and quality procedures for construction work;

4. Control over quality of incoming construction material, reinforcement, equipment, concrete, construction and assembly works, and testing and installation of the equipment in industrial and non-industrial objects and ensuring of quality acceptance of objects/facilities after works completion by the sub-contractors and General Contractor;

5. Monitoring of various tests normally cover examination of mechanical components, electrical and I&C equipment and civil structures according to the applicable codes and standards and performed by the sub-contractors of the General Contractor;

6. Periodically organizing management level meeting with the General Contractor and sub-contractors to review the construction progress and resolving various with mutual consultation;

7. Establishing management system for accepting the completed work, equipment and documentation packages and achieving milestones in accordance to the General Contract;

8. Maintaining of Log of each activity and constrains (if any), updating documentation, ensuring clearance of all non-conformance coordinating interdisciplinary entities of the General Contractor;

9. Reviewing the executive documentation for construction of industrial and non-industrial objects/facilities, reviewing as-built documentation in accordance with ABD management procedures;

10. Acceptance of the constructed objects/facilities by the Sub-contractors and General Contractor and technical archives of the Rooppur NPP;

11. Drawing up of permissive documents for construction and assembly works, preparing and submission of documentation packages for obtaining the required nuclear regulatory licenses for the Rooppur NPP construction and nuclear radiation facilities; preparing documentations for introduction of changes into provisions of licenses which are not planned in the initial project of the Rooppur NPP;

12. Ensuring fulfillment of provisions of licenses for commissioning of the Rooppur NPP and timely reporting on their fulfillment;

13. Preparing documentations for obtaining permission/authorization from other regulatory and national organizations involved in execution of construction and commissioning works and keeping a database of the licensing and permitting documents;

14. Participation in a comprehensive inspection of buildings and structures of the Rooppur NPP and elaboration and implementation of activities following the inspection results;

15. Performing subsidiary tasks for creation infrastructure for NPP construction within the scope of BAEC;

16. Developing approaches towards coordination among different ministries, organizations, utility, off-takers and the grid company, regulatory authority, general contractors, sub-contractors, suppliers, international organizations like IAEA and various other supportive organizations;

17. Taking preparation and technical supervision of construction, mounting and commissioning readiness of rooms, systems equipment and separate objects of start-up facility of power units of Rooppur NPP.

18. Planning for commissioning phase activities and establishing commissioning group on behalf of Customer Organization.

Zoning of Rooppur NPP

The zoning of a nuclear facility is regulated by the regulatory documents.The National Nuclear and Radiological Emergency Preparedness and Response Plan (NNRERP) defines the conceptual emergency planning zones of NPP including Rooppur NPP. The zooning of Rooppur NPP is shown in picture 53

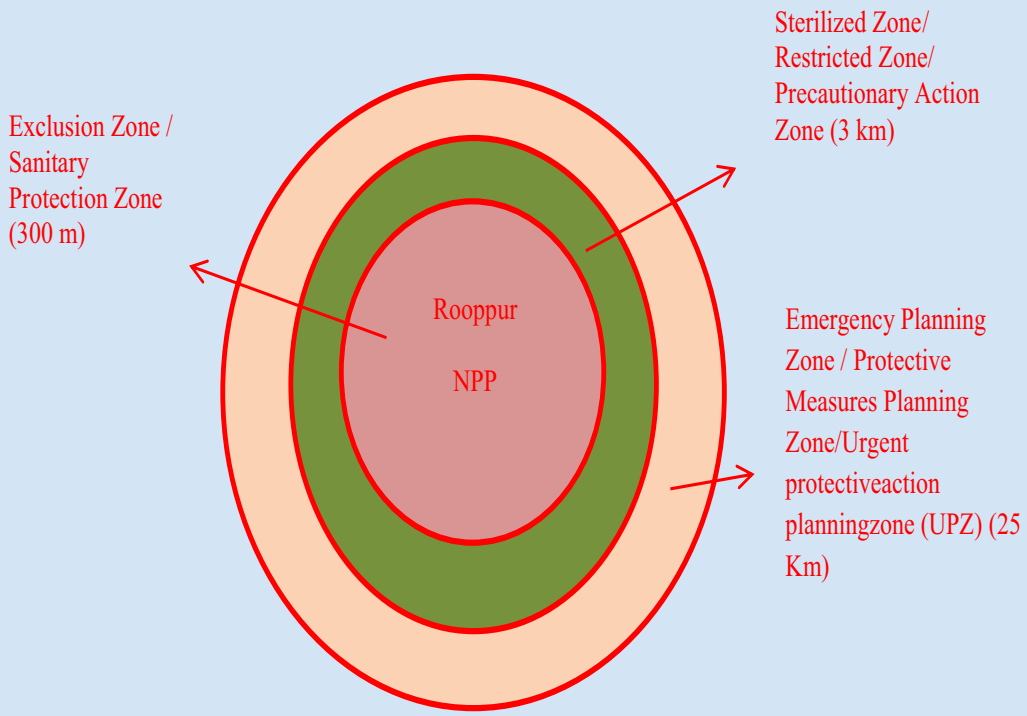

Picture - 53: The emergency planning zones of RNPP

In Rooppur NPP of Bangladesh, based on design and technology of the third generation plus nuclear reactor, the Exclusion Zone/ Sanitary Protection Zone is considered as 300 m. For similar technologies, the zoning concept used in the Rooppur NPP can be used and for more advanced technology and based on site characteristics the radius of the emergency planning zones can also be further reduced. In case of Rooppur NPP, the radius of the Precautionary Action Zone (PAZ)/Sterilized Zone/Natural Growth Zone is considered as 3 km. and the maximum boundary of the Emergency Planning Zone (EPZ) is considered as 25 km. The people can easily live peacefully in the PAZ and EPZ. The regulatory guidelines of BAERA shall approve the size of exclusion area boundary and emergency planning zone for every nuclear installation based on an application as a part of relevant authorization procedure.

Radiation safety is an important parameter of a nuclear power plant. The Rooppur NPP is designed in such a way that it will fulfill the fundamental principles and radiation safety norms, as well as to limit radiation impact on environment so as not to exceed the limits established by national and international organizations. During normal operation, the exposure doses absorbed by the personnel and population, and the release of radioactive substances into the environment shall be kept below the established limits at reasonably achievable and socially and economically justified low level. The radiation consequences of design basis accident in the worst case

would be limited within 300 meters at the border of sanitary protection zone maintaining the dose limits as per the regulatory documents. In case of Beyond Design-Basis Accidents, the exposure doses at the boundary of protective measures planning zone and outside will not exceed the permissible level.

The Rooppur NPP is establishing a well-structured off-site Environmental Radiation Monitoring System (ERMS) for regularly monitoring the radiation level of the precautionary action zone (PAZ) and partly of the Emergency Planning Zone (EPZ). The environmental radiation monitoring shall include the following: (1) continuous monitoring of the Equivalent Dose Rate on the basis of stationary, Automated Environmental Radiation Monitoring Station (AERMS) post, (2) continuous monitoring of the volume activity of atmospheric air, (3) periodic monitoring of the radioactive contamination of environment entities on the basis of portable, mobile or moving radiation monitoring facilities, as well as laboratory analysis on the basis of external radiation monitoring laboratory consisting of two laboratories. The main objectives of these monitoring systems are to measured radiation level around the surrounding areas of Rooppur NPP during commissioning, operation and decommissioning of the plant. The measuring data and information about the radiation condition of the environment in the Rooppur NPP observation zone will beprovided to the public and supervisory authorities for justifying that the Rooppur NPP is not causing any radiation hazads at entire life cycle of the plant.

About 12.5 km radius area around the Rooppur NPP will be under constant radiological and environmental monitoring and there are 23 individual Automated Environmental Radiation Monitoring Station are designed for the plant. The locations of theseatations/posts are: (1) Rooppur, at territory of Rooppur High School, (2) Pakshy, at territory of CNG Filling Station, (3) Pakshy, at territory of North Bangle Paper Mill, (4) Bheramara, at territory of Bheramara Power Station, (5) Jaynagar, at territory of Power Grid Supply Centre, (6) Juktitala, at territory of Cement Factory , (7) Mokaripur, at territory of Primary School, Char Mokaripur,,(8) Poschim Bahirchar, at territory of Primary School, (9) Dadapur, at territory of Dadpur Hena Market, (10) Shahapur, at territory of High School , (11) Mirkamari, at territory of Ideal Dakhil Madrasa, (12) Ishwardi, at territory of Cement Factory, (13) Ishwardi, at territory of ice production factory, (14) Baggarypara, at territory of Community Clinic, (15) Bheramara, at territory of Rail Way Station, (16) Char Gorgori, at territory of Alhajer Market, (17) Dadpur, at territory of Community Clinic, Bharaimari, (18) Ishwardi, at territory of Airport Academy, (19) Daulatpur College (monitoring outside the surveillance zone), (20) Rooppur , the Inspector Banglo hotel, (21) Rooppur NPP, (22) Rooppur , the market of Rooppur and (23) Rooppur , the Rooppur NPP on the Padma river.

In addition, for communication system will be established mainly communicating with the population of the precautionary action zone around the Rooppur NPP (3 kilometers). However,about five-kilometer radius area around the Rooppur nuclear power plant, there are 45 posts of Emergency Alarm System (EAS) are designed for Rooppur NPP. The locations of LAS of Rooppur NPP are: (1) Fisherman colony around 50 m near a pond, (2) Papermill high school playground, (3) 100 m behind hot & fresh, (4) Rooppur High School, (5) Rooppur Nongiri Masjid towards Plant, (6) Char Rooppur Wapda govt. Primary School, (7) 95 Char Rooppur Sharengpara Govt. Primary School, (8) 33 no. Char Rooppur Primary School, (9) Sahapur Saheed Abul Kashem High School, (10) Diar Baghail Jame Mosque, (11) North Bengal Paper Mills School (Entrance of soil filling project of NPP/50m opposite of Paper Mill Colony Gate), (12) Cafe De Al-baik (Opposite of the cafe), (13) Pakshi Jame Masjid, Pakshi Bazar (Corner of the Pakshi Resort), (14) Railway Officer's Colony, (15) EPZ Main Road (Opposite of Rahim Afroz), (16) Juktitola Main Rd (Jiuktitola Jame Masjid), (17) Uttar Baghail (200m East from Pabna Ishwardi Highway) (Hasina Wahed Smrity Govt. Primary School), (18) 200 m east from Abu Kashem Tea Stall, 200 NW from Agrani Bank, (19) Diar Baghail-Jigatola Road, Alt: Baghail Purba Para Jame Mosque, (20) 80-100m SW from Notun Hat (Opposite of Green City), (21) Sahapur Maddhopara Jame Mosque (Bogamia Road), (22) Sahapara Mosque, (23) Sahapur Shahid Abul Kashem High School (Bogamia Road) (Char Rastar Mor), (24) In the premises of Diyar Sahapur govt primary school, (25) East to Rice mill, Opposite of Tea stall (300m north from Green city), (26) Baroichara Al-Falah Mosque, (27) Abul Hossain High School (Baghail, Pakshi), (28) 60-80m NE from Baghoil Purbapara jame Masjid, (29) N705 (Char Mirkamari) 150m SW from Sonali Bank, (30) Mohadevpur Al hera Jame Mosque, (31) Barampur (50m NW from Koykunda Abu market concern

central James mosque (Koykunda Baganpara Mosque), (32) Rooppur-Pabna Road (50 m South from Kaikunda Mosque Darbar Sharif & Forkania Madrasa, (33) Luxmikunda Jame Mosque, (34) No. 58 Baherchar 12 Dag Govt. Primary School, 12 Dag , Bheramara, Kustia, (35) Opposite of Bangladesh sub-post office (7041)/Sonali bank ltd./BPDB, (36) Kopejan Govt. Primary School, Moslempur, Bhairamara, Kustia, (37) Chasi Club Mor, Bhairamara, Kustia. (Baherchar 16 Dag Eid field), (38) No. 21 Baherchar Govt. Primary School, Baherchar, Bhairamara, Kustia (39) Aminul Islam Eid Field, adjacent to 16 Dag 68 Para Rupali Govt. Primary School, Bheramara, Kustia. (40) Ramkrishnopur Govt. Primary School, Bheramara, Kustia, (41) Char Mokarimpur Govt. Primary School, (42) Solemania Govt. Primary School, Golap Nagar, ward 5, Bheramara, Kustia, (43) Tilakpur Govt. Primary School, (44) Bepza Public School & College, (45) Maniknagar Purbapara Jame Mosque.

The borders of PAZ and UPZ have to be defined by the external borders of elementary administrative divisions-Union, Municipality, or Upazila Town, whose territory falls within the emergency planning zones.

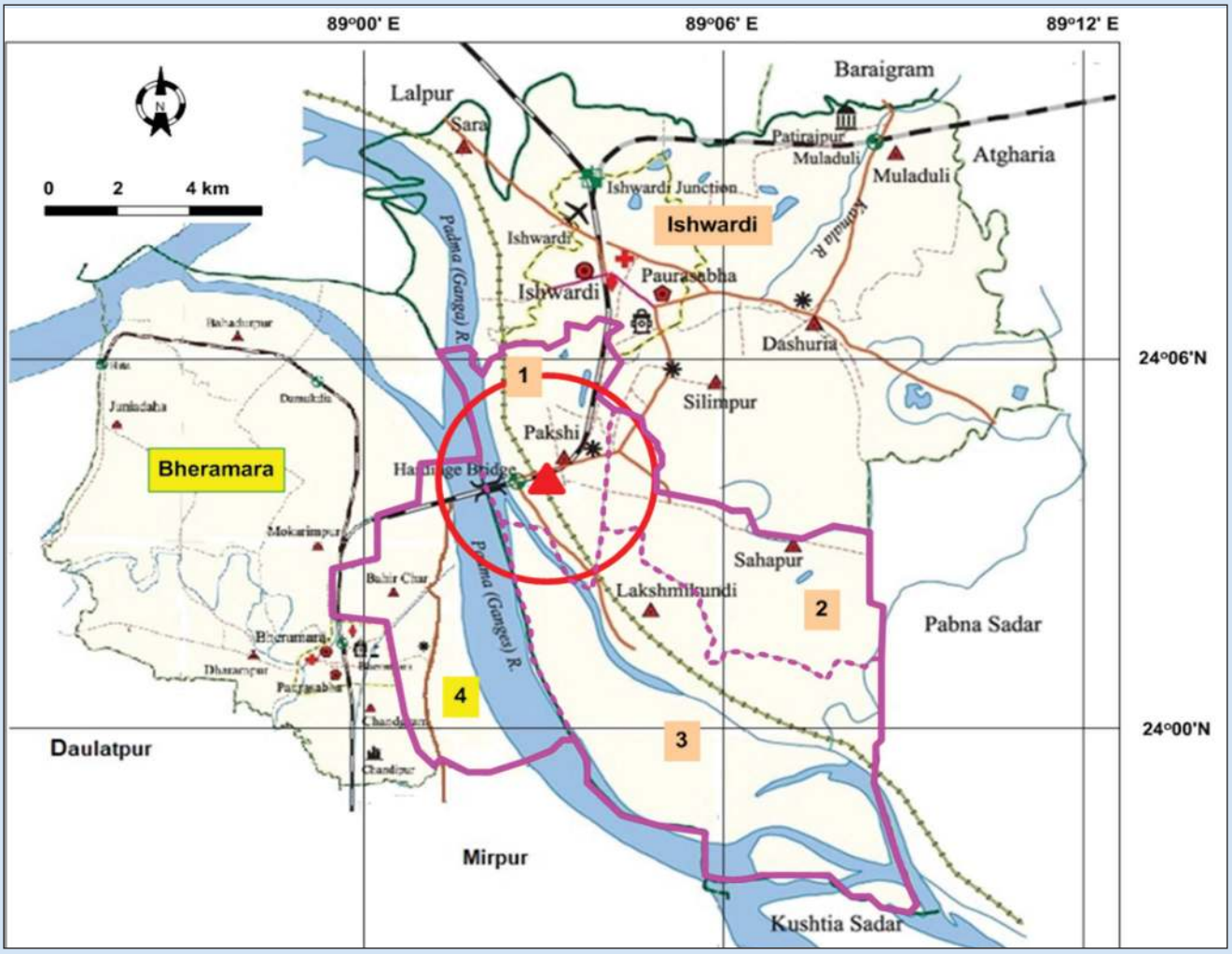

Picture - 54: Administrative scheme of PAZ of Rooppur NPP

The picture 54, represents the administrative scheme of PAZ of Rooppur NPP which includes: (1) Pakshi Union, (2) Sahapur Union, (3) Lakshmikundi Union of Ishwardi Upazila; (4) Bahir Char Union of Bheramara Upazila. Pink line presents outer borders of those Unions. The dashed pink line is a border between Unions and the red circle has radius of 3 km and center in Unit-1 of the Rooppur NPP is the PAZ for Rooppur NPP. The Green line is an administrative border between Upazilas which territories lay in PAZ of the Rooppur NPP. Ishwardi is an Upazila of Pabna District in Rajshahi Division; Bheramara is an Upazila of Kushtia District in Khulna Division.

Picture - 55: Administrative Scheme of the UPZ of the Rooppur NPP.

The picture 55, represents the scheme of the UPZ of the Rooppur NPP. The Green line describes the administrative border between Upazilas which territories belong to UPZ of the Rooppur NPP; pink line is the outer border of Upazilas which territories are partly in at distance of 25 km from Rooppur NPP. It presents a map of Urgent Protective Action Planning Zone of the Rooppur NPP. It includes many Upazilas of Four Districts: Bagha is Upazila of Rajshahi District in Rajshahi Division; Lalpur and Barigram are Upazilas of Nator District of Rajshahi Division; Chatmohaar, Atgharia, Ishwardi and Pabna Sabar are Upazilas of Pabna District in Rajashi Divirion; Bheramara, Daulatpur, Mirpur and Kushtia Sabar Are Upazilas of Kushtia District in Khulna Division.


NUCLEARDAY

Bangladesh Atomic Energy Commission
Ministry of Science & Technology

www.rooppurnpp.gov.bd